パーツブック
PARTS BOOK

KE-430C, KE-431C
KE-432C

本縫電子閂止ミシン [KE-430]
本縫電子ベルトループ付けミシン [KE-431C]
本縫電子鳩目穴閂止ミシン [KE-432C]
ELECTRONIC LOCKSTITCH BAR TACKER [KE-430C]
ELECTRONIC LOCKSTITCH BELT LOOP BAR TACKER [KE-431C]
ELECTRONIC LOCKSTITCH EYELET BUTTONHOLE END BAR TACKER
[KE-432C]

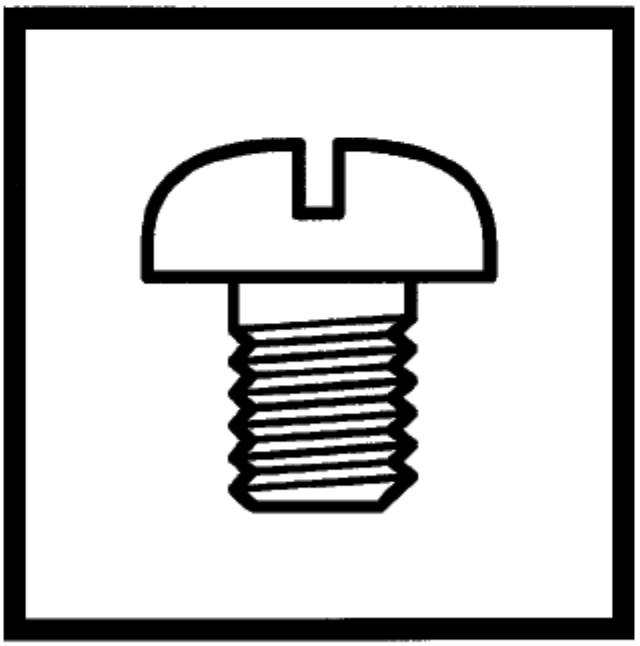

brother®

本縫電子閂止ミシン / Electronic Lock Stitch Bar Tacker

① 1: 被服 / Ordinary materials
2: デニム / Denim
7: メリヤス / Knitted materials

本縫電子ベルトループ付けミシン / Electronic Lock Stitch Belt Loop Bar Tacker

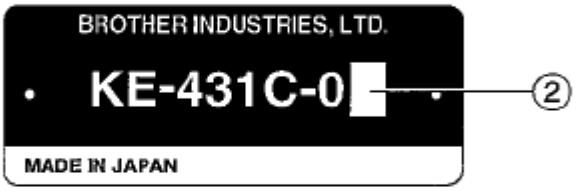

② 2: 閂止長さ 6〜14 mm / Bar tacking length 6-14mm
3: 閂止長さ 14〜25 mm / Bar tacking length 14-25mm

本縫電子鳩目穴閂止ミシン / Electronic Lock Stitch Eyelet Buttonhole End Bar Tacker

パーツブックご利用に際して

1. この本は、2002年10月のデータに基づいて作成されたものです。
2. 部品は予告なしに設計変更される場合があります。
3. 組単位で補給する部品は[　　]　破線で示してあります。
4. 部品コード欄が*となっている場合は、仕様別部品一覧表及びゲージ部品一覧表でお調べ下さい。

目　次

A. 主体関係 …… 1
B1. 上軸・針棒関係 …… 3
B2. 上軸・針棒関係 …… 5
C1. 送り関係 …… 7
C2. 送り関係 (KE-430C) …… 9
C3. 送り関係 (KE-431C) …… 11
C4. 送り関係 (KE-432C) …… 13
D1. 押エ上ゲ関係 (KE-430C, KE-431C) …… 17
D2. 押エ上ゲ関係 (KE-432C) …… 19
E. 下軸関係 …… 21
F. 給油潤滑関係 …… 25
G. 糸通シ関係 …… 27
H. 糸巻関係 …… 29
J. 糸切リ関係 …… 31
K. 糸払イ関係 …… 35
L. 糸取リ関係 …… 35
M. 糸締メ関係 …… 37
N. 針位置検出器関係 …… 39
P. プリント基板関係 …… 39
Q1. コントロールボックス関係 …… 41
Q2. コントロールボックス関係 …… 45
R. 電装品関係 …… 49
S. 操作パネル関係 …… 53
T. 動力台関係 …… 53
U1. 踏板関係 …… 55
U2. 踏板関係 (オプション部品) …… 57
U3. 踏板関係 (オプション部品) …… 59
V. 付属装置関係 (オプション部品) …… 61
Z1. 付属品関係 …… 63
Z2. 付属品関係 …… 67
Sp1. 仕様別部品一覧表 (KE-430C) …… 70
Sp1. 仕様別部品一覧表 (KE-430C) …… 71
Sp2. 仕様別部品一覧表 (KE-431C, KE- 432C) …… 72
Sp2. 仕様別部品一覧表 (KE-431C, KE- 432C) …… 73
Ga1. ゲージ部品一覧表 (KE-430C) …… 74
Ga1. ゲージ部品一覧表 (KE-430C) …… 75
Ga1. ゲージ部品一覧表 (KE-430C) …… 76
Ga2. ゲージ部品一覧表 (KE-431C) …… 77
Ga3. ゲージ部品一覧表 …… 78
Wa. 警告ラベル …… 79
索引 …… 80

Notes for using this parts book

1 This book was prepared based on information available in October 2002.

2 Parts are subject to changes in design without prior notice.

3 Parts supplied as complete assemblies are circled by a dotted line.

4 If the symbol * is found in the " Parts No." column, refer to the different parts lists, gauge parts list on page 70-78.

CONTENTS

A.	Machine body	1
B1.	Upper shaft and needle bar mechanism	3
B2.	Upper shaft and needle bar mechanism	5
C1.	Feed mechanism	7
C2.	Feed mechanism (KE-430C)	9
C3.	Feed mechanism (KE-431C)	11
C4.	Feed mechanism (KE-432C)	13
D1.	Work clamp lifter mechanism (KE-430C, KE-431C)	17
D2.	Work clamp lifter mechanism (KE-432C	19
E.	Lower shaft mechanism	21
F.	Lubrication	25
G.	Threading mechanism	27
H.	Bobbin winder mechanism	29
J.	Thread trimmer mechanism	31
K.	Thread wiper mechanism	35
L.	Thread take-up mechanism	35
M.	Thread nipper mechanism	37
N.	Synchronizer	39
P.	Printed circuit board mechanism	39
Q1.	Control box mechanism	41
Q2.	Control box mechanism	45
R.	Power supply equipment mechanism	49
S.	Operation panel mechanism	53
T.	Power table	53
U1.	Foot switch pedal mechanism	55
U2.	Foot switch pedal mechanism (Option parts)	57
U3.	Foot switch pedal mechanism (Option parts)	59
V.	Attachment set (Option parts)	61
Z1.	Accessories	63
Z2.	Accessories	67
Sp1.	Diifferent Parts list (KE-430C)	70
Sp1.	Diifferent Parts list (KE-430C)	71
Sp2.	Diifferent Parts list (KE-431C & KE-432C)	72
Sp2.	Diifferent Parts list (KE-431C & KE-432C)	73
Ga1.	Gauge parts list (KE-430C)	74
Ga1.	Gauge parts list (KE-430C)	75
Ga1.	Gauge parts list (KE-430C)	76
Ga2.	Gauge parts list (KE-431C)	77
Ga3.	Gauge parts list	78
Wa.	Warning labels	79
	Index	80

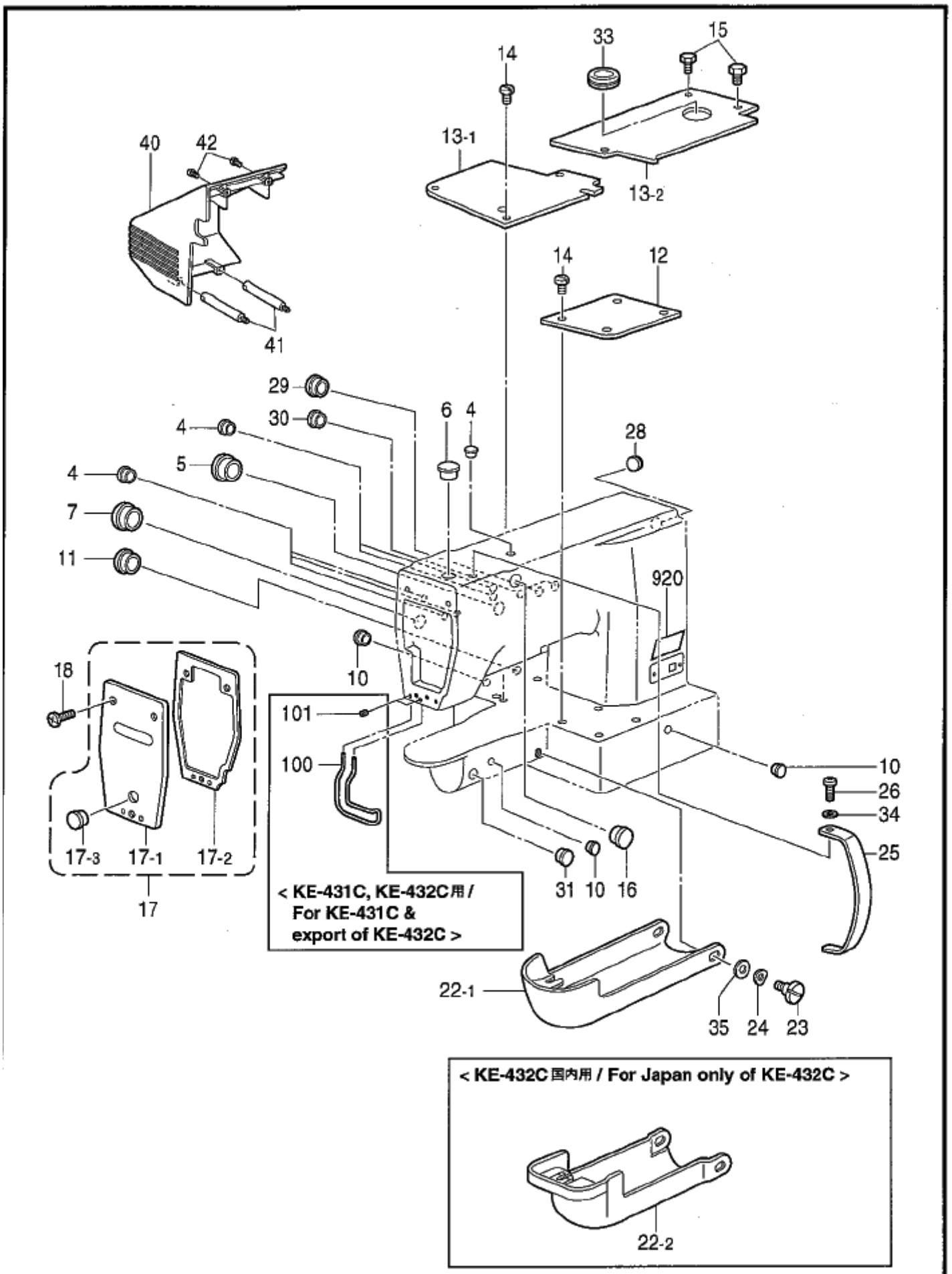
33
15
14
13-1
13-2
40
42
41
14
12
29
30
6
4
4
28
5
4
7
11
920
18
10
101
100
10
26
34
25
17-3
17-1
17-2
17
31
10
16
< KE-431C, KE-432C用 /
For KE-431C &
export of KE-432C >
22-1
35
24
23
< KE-432C 国内用 / For Japan only of KE-432C >
22-2

118-V30-050

REF.NO	CODE	Q'TY	ヒンメイ	NAME OF PARTS	RM
4	104450101	6	ｺﾞﾑｾﾝ8	RUBBER CAP, 8	
5	140392009	1	ｵｲﾙﾌﾀ	OIL CAP	
6	117934001	1	ｺﾞﾑｾﾝ13.5	RUBBER CAP, 13.5	
7	140392009	2	ｵｲﾙﾌﾀ	OIL CAP	
10	104450101	3	ｺﾞﾑｾﾝ8	RUBBER CAP, 8	
11	104449001	1	ｺﾞﾑｾﾝ15.5	RUBBER CAP, 15.5	
12	S37915009	1	ﾍﾞｯﾄﾞｶﾊﾞｰR	BED COVER, R	
13-1	S53119001	1	ﾍﾞｯﾄﾞｶﾊﾞｰLF	BED COVER, LF	
13-2	S53120001	1	ﾍﾞｯﾄﾞｶﾊﾞｰLR	BED COVER, LR	
14	106629002	9	ｼﾒﾈｼﾞ4.37	SCREW, SM4.37	
15	017680512	2	ﾎﾞﾙﾄ4.37X5	BOLT, SM4.37X5	
16	S23337001	1	ｺﾞﾑｾﾝ18.5	RUBBER CAP, 18.5	
17	S49960109	1	ﾒﾝｲﾀｸﾐ	FACE PLATE ASSY	
17-1	S49961109	1	ﾒﾝｲﾀ	FACE PLATE	
17-2	S49962000	1	ﾒﾝｲﾀﾊﾟｯｷﾝ	FACE PLATE PACKING	
17-3	117934001	1	ｺﾞﾑｾﾝ13.5	RUBBER CAP, 13.5	
18	060671212	3	ﾊﾞｲﾝﾄﾞ357-40X12	SCREW, BIND SM3.57-40X12	
			<KE-430C, 431C用>	<For KE-430C & 431C>	
			<KE-432C輸出用>	<For Export of KE-432C>	
22-1	152842059	1	ｵｵｶﾏｶﾊﾞｰｸﾐ	SHUTTLE RACE COVER ASSY	
			<KE-432C国内向用>	<For Japan only of KE-432C>	
22-2	S49681009	1	ｵｵｶﾏｶﾊﾞｰｸﾐC	----------	
23	S57925001	2	ﾀﾞﾝﾈｼﾞ6.35	SHOULDER SCREW, SM6.35	
24	109239002	2	ﾅﾐﾊﾞﾈｻﾞｶﾞﾈ	WAVE WASHER	
25	S55208000	1	ﾃﾝﾋﾟﾝｶﾊﾞｰ	THREAD TAKE-UP LEVER COVER	
26	062681012	1	ﾅﾍﾞｺ437-40X10	SCREW, PAN SM4.37-40X10	
28	S20164001	1	ｺﾞﾑｾﾝ13	RUBBER CAP, 13	
29	150592001	2	ｺﾞﾑｾﾝ16	RUBBER CAP, 16	
30	104821001	1	ｺﾞﾑｾﾝ10.5	RUBBER CAP, 10.5	
31	S44010001	1	ｺﾞﾑｾﾝ11.5	RUBBER CAP, 11.5	
33	S51460009	1	ｸﾞﾛﾒｯﾄMG-9	RUBBER CAP, MG-9	
34	100645003	1	ｻﾞｶﾞﾈ	WASHER	
35	025080132	2	ﾋﾗｻﾞｶﾞﾈｼｮｳ8	WASHER, PLAIN S 8	
40	S51098000	1	ｿｸﾒﾝｶﾊﾞｰIM	FRAME SIDE COVER, IM	
41	S59920001	2	ﾍﾞﾙﾄｶﾊﾞｰｼﾁｭｳ	BELT COVER SUPPORT PILLAR	
42	062711012	4	ﾅﾍﾞｺ476-32X10	SCREW, PAN SM4.76-32X10	
			<KE-431C, 432C用>	<For KE-431C & 432C>	
100	S49999201	1	ﾌｨﾝｶﾞｰｶﾞｰﾄﾞ	FINGER GUARD	
101	011679312	2	ﾄﾒﾈｼﾞ3.57ﾋﾗ	SET SCREW, (FT) SM3.57	
920	S44629001	1	Eﾏｰｸ	E MARK	

B1．上軸・針棒関係 / Upper shaft and needle bar mechanism

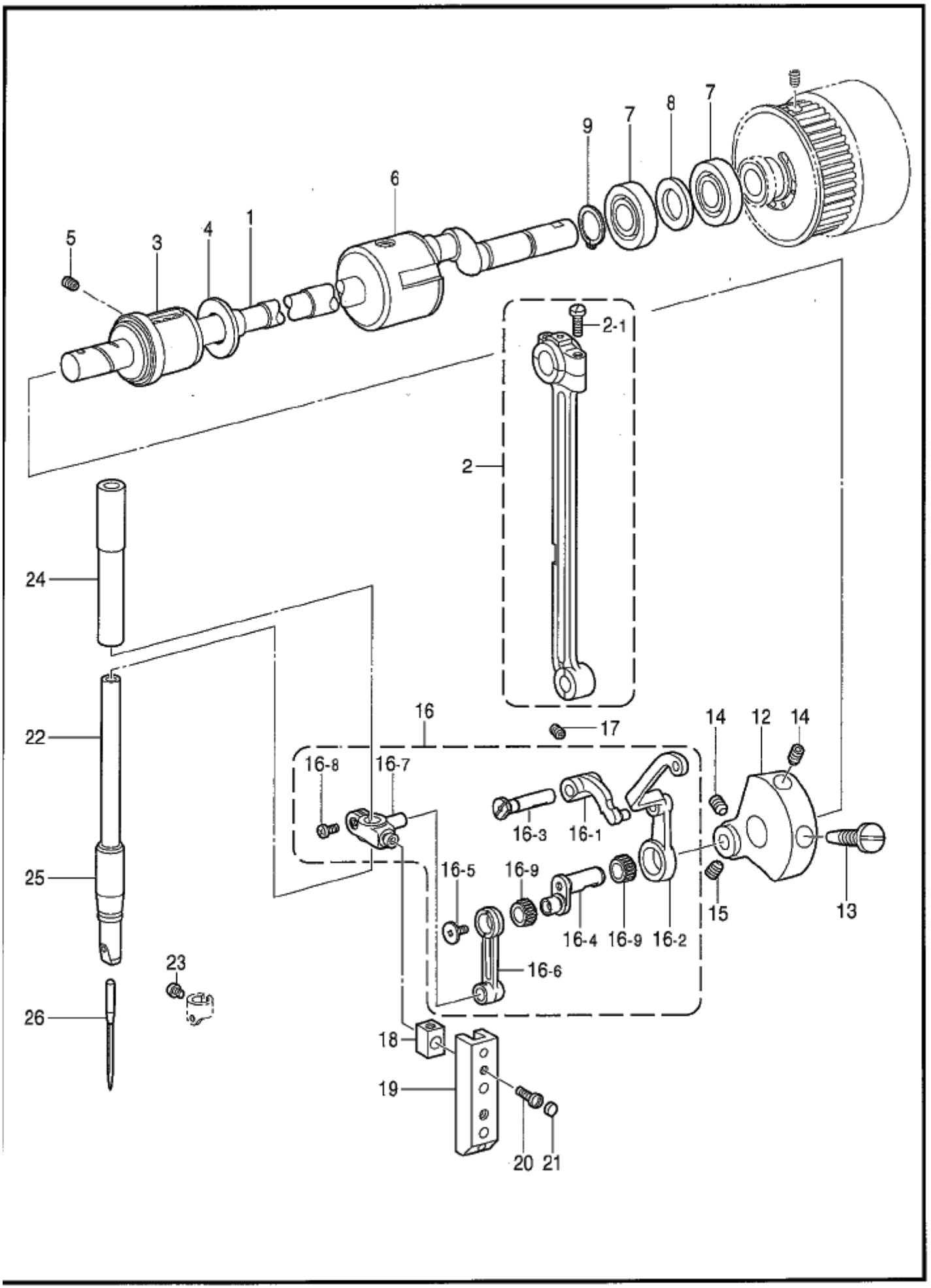

118-V30-123

B1 . 上軸・針棒関係 / Upper shaft and needle bar mechanism

REF.NO	CODE	Q'TY	ヒンメイ	NAME OF PARTS	RM
1	S49688001	1	ｳﾜｼﾞｸ	UPPER SHAFT	
2	S45147101	1	ｸﾗﾝｸﾛｯﾄﾞｸﾐ	CRANK ROD ASSY	
2-1	144712001	2	ｼﾒﾈｼﾞ4.76	SCREW, SM4.76	
3	S49582001	1	ｳﾜｼﾞｸﾒﾀﾙF	UPPER SHAFT BUSH, F	
4	S49583001	1	ｽﾗｽﾄｻﾞｶﾞﾈ	THRUST WASHER	
5	014780622	1	ｱﾅﾄﾒﾈｼﾞ6.35ｸﾎﾞﾐ	SET SCREW, SOCKET (CP) SM6.35	
6	140726000	1	ｳﾜｼﾞｸﾒﾀﾙM	UPPER SHAFT BUSH, M	
7	072630260	2	ﾍﾞｱﾘﾝｸﾞ6302VV	BALL BEARING, 6302VV	
8	116920001	1	ｵｸﾘｼﾞｸｽﾗｽﾄﾘﾝｸﾞ	RING, THRUST	
9	048150142	1	ﾄﾒﾜｼﾞｸﾖｳC15	RETAINING RING, EXTERNAL C15	
12	S49584000	1	ﾂﾘｱｲｸﾗﾝｸD	THREAD TAKE-UP CRANK, D	
13	100250001	1	ｼﾒﾈｼﾞ7.14	SCREW, SM7.14	
14	014770632	2	ｱﾅｸﾎﾞﾐ635−40X6	SET SCREW, SOCKET (CP) SM6.35X6	
15	S55877001	1	ﾄﾒﾈｼﾞ6.35ｸﾎﾞﾐ	SET SCREW, (CP) SM6.35	
16	S49585001	1	ﾊﾘﾎﾞｳﾚﾝｶﾝｸﾐ	THREAD TAKE-UP LEVER SET	
16-1	S49587001	1	ﾃﾝﾋﾞﾝｻｻｴ	THREAD TAKE-UP SUPPORT	
16-2	S49588001	1	ﾃﾝﾋﾞﾝﾄﾞｳ	THREAD TAKE-UP LEVER	
16-3	S47091001	1	ﾃﾝﾋﾞﾝｻｻｴｼﾞｸ	THREAD TAKE-UP SUPPORT SHAFT	
16-4	S49589001	1	ﾊﾘﾎﾞｳｸﾗﾝｸ	NEEDLE BAR CRANK	
16-5	145465001	1	ｼﾒﾈｼﾞ3.57L	SCREW, SM3.57-40X6 L	
16-6	S49689001	1	ﾊﾘﾎﾞｳﾚﾝｶﾝ	NEEDLE BAR CONNECTING ROD	
16-7	S37926101	1	ﾊﾘﾎﾞｳﾀﾞｷ	NEEDLE BAR CLAMP	
16-8	062680812	1	ﾅﾍﾞｺ437−40X8	SCREW, PAN SM4.37-40X8	
16-9	147777000	2	ﾆｰﾄﾞﾙﾍﾞｱﾘﾝｸﾞ	NEEDLE BEARING	
17	014780622	1	ｱﾅﾄﾒﾈｼﾞ6.35ｸﾎﾞﾐ	SET SCREW, SOCKET (CP) SM6.35	
18	102630001	1	ﾊﾘﾎﾞｳｱﾝﾅｲｶｸｺﾏ	NEEDLE BAR GUIDE SLIDE BLOCK	
19	S49593000	1	ﾊﾘﾎﾞｳｱﾝﾅｲ	NEEDLE BAR GUIDE	
20	100242003	2	ｼﾒﾈｼﾞ3.57	SCREW, SM3.57-40X5	
21	155578000	2	ｺﾞﾑｾﾝ7.2	RUBBER CAP, 7.2	
22	152240101	1	ﾊﾘﾎﾞｳA	NEEDLE BAR, A	
23	144458001	1	ｱﾀﾏﾂｷﾄﾒﾈｼﾞ3.57	SET SCREW, SM3.57-40X4.5	
24	152242001	1	ﾊﾘﾎﾞｳﾒﾀﾙU	NEDDLE BAR BUSH, U	
25	152243001	1	ﾊﾘﾎﾞｳﾒﾀﾙD	NEEDLE BAR BUSH, D	
26	*	1	ﾐｼﾝﾊﾘ	NEEDLE	

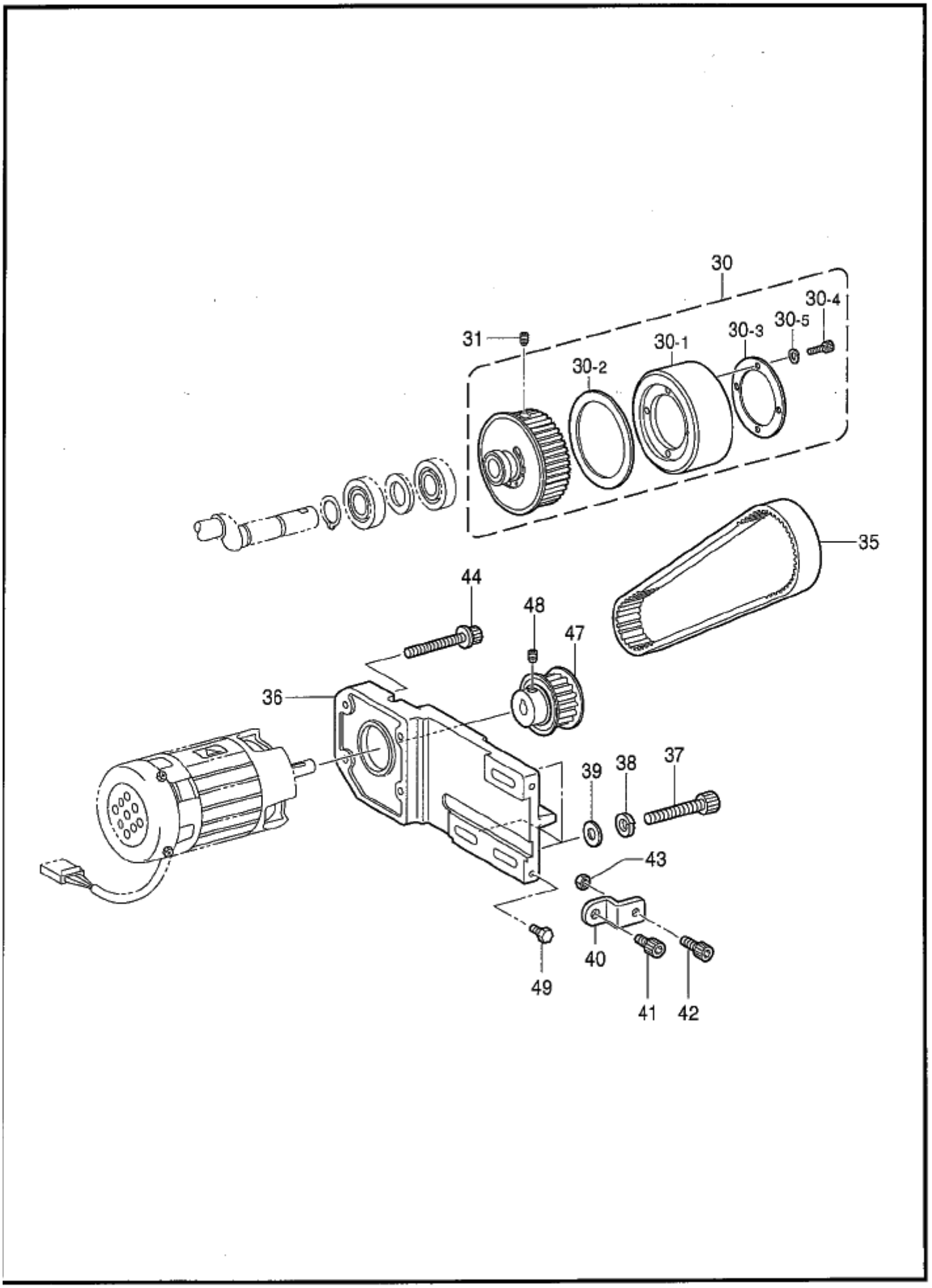

118-V30-123

B2 . 上軸・針棒関係 / Upper shaft and needle bar mechanism

REF.NO	CODE	Q'TY	ヒンメイ	NAME OF PARTS	RM
30	S52834201	1	Uタイミングプーリクミ	TIMING PULLEY ASSY, U	
30-1	S56017000	1	ウワシクプーリ	UPPER SHAFT PULLEY	
30-2	S56018000	1	プーリスペーサ	PULLEY SPACER	
30-3	S56019001	1	プーリザガネ	PULLEY WASHER	
30-4	018401236	3	アナボルト4X12	BOLT, SOCKET M4X12	
30-5	028040246	3	バネザガネ2-4	WASHER, SPRING 2-4	
31	S55572001	2	アナクボミ595-28X10	SET SCREW, SOCKET(CP)SM5.95X10	
35	S52838000	1	ウワシクタイミングベルト	UPPER SHAFT TIMING BELT	
36	S52839200	1	IMモータブラケット	MOTOR BRACKET, IM	
37	018083022	3	アナボルト8X30	BOLT, SOCKET M8X30	
38	028080242	3	バネザガネ2-8	WASHER, SPRING 2-8	
39	025080232	3	ヒラザガネチュウ8	WASHER, PLAIN M 8	
40	S52840001	1	ベルトチョウセツイタ	BELT ADJUSTING PLATE	
41	018061022	1	アナボルト6X10	BOLT, SOCKET M6X10	
42	018062522	1	アナボルト6X25	BOLT, SOCKET M6X25	
43	021060102	1	ナット1シュ6	NUT, 1 M6	
44	S47270001	4	アナボルトザクミ6X30	BOLT, SOCKET (S/P WASHER) M6X30	
47	S52836000	1	モータタイミングプーリクミ	MOTOR TIMING PULLEY ASSY	
48	S55572001	1	アナクボミ595-28X10	SET SCREW, SOCKET(CP)SM5.95X10	
49	017680512	1	ボルト4.37X5	BOLT, SM4.37X5	

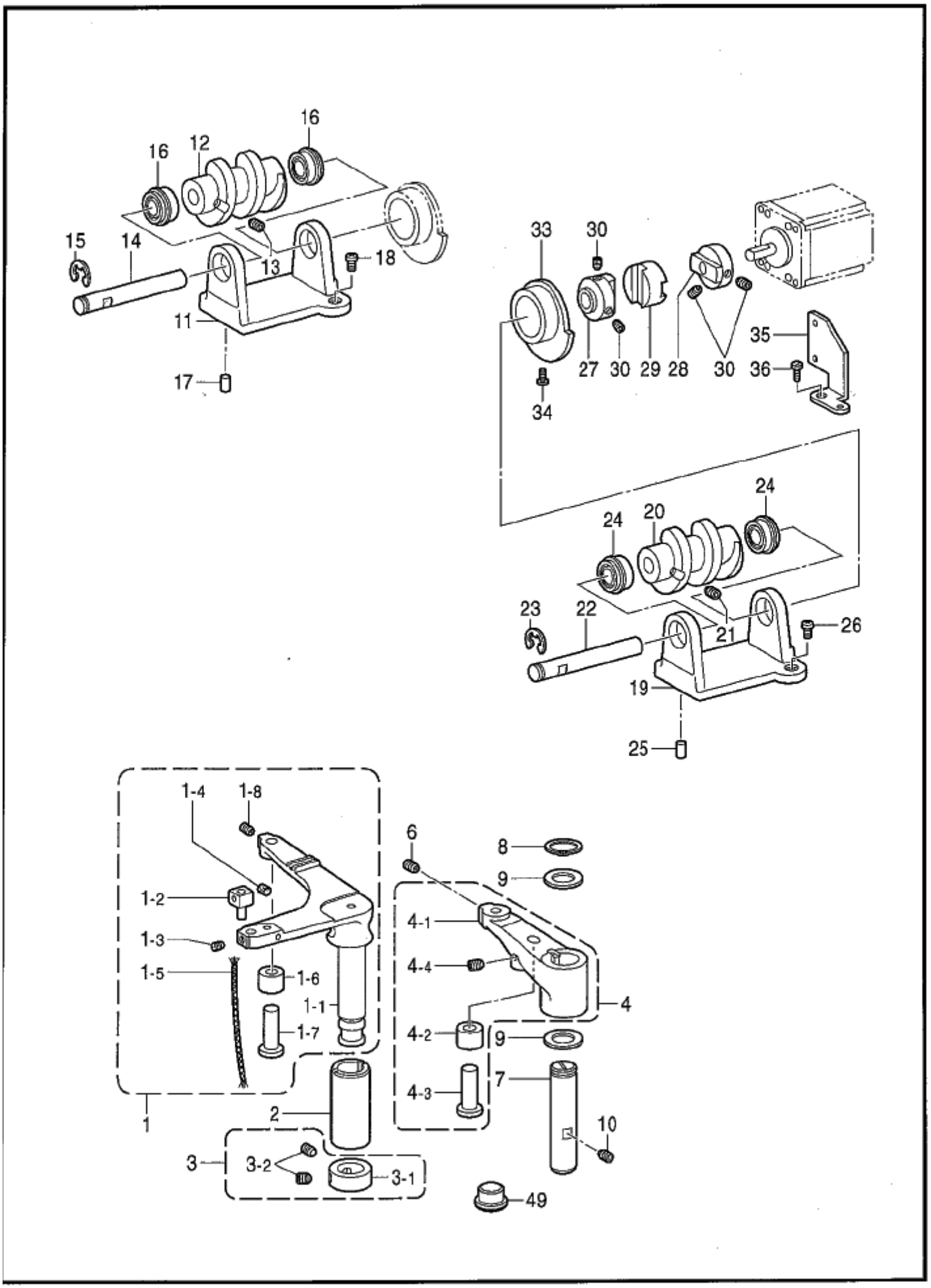
16
16
12
15
14
13
18
11
17
33
30
27
30
29
28
30
35
36
34
24
24
20
23
22
21
26
19
25
1-4
1-8
1-2
1-3
1-5
1-6
1-1
1-7
1
2
3
3-2
3-1
6
8
9
4-1
4-4
4
4-2
9
4-3
7
10
49

118-V30-202

C1 . 送り関係 / Feed mechanism

REF.NO	CODE	Q'TY	ヒンメイ	NAME OF PARTS	RM
1	S37930201	1	Xオクリレバークミ	X-FEED LEVER ASSY	
1-1	S37931101	1	Xオクリレバー	X-FEED LEVER	
1-2	S59912001	1	ヨコオクリカクゴマクミ	T-LENGTH FEED SLIDE BLOCK ASSY	
1-3	151602002	1	トメネジ4.37	SET SCREW, SM4.37-40X6	
1-4	153924001	1	フエルト	FELT	
1-5	108802001	1	クミヒモ4X4	WICK, 4X4 L=250	
1-6	S37932101	1	オクリカムコロ	FEED CAM ROLLER	
1-7	S37933001	1	コロジク	ROLLER SHAFT	
1-8	014760622	1	アナトメネジ5.95	SET SCREW, SOCKET SM5.95	
2	S37934001	1	Xオクリレバーメタル	X-FEED LEVER BUSH	
3	183493001	1	オクリジクセットカラークミ	F-SHAFT SET SCREW COLLAR ASSY	
3-1	S09212001	1	セットカラー	SET SCREW COLLAR	
3-2	101706001	2	トメネジ6.35	SET SCREW, SM6.35-40X5.5	
4	S59913001	1	Yオクリレバークミ	Y-FEED LEVER ASSY	
4-1	S59914001	1	Yオクリレバー	Y-FEED LEVER	
4-2	S37932101	1	オクリカムコロ	FEED CAM ROLLER	
4-3	S37933001	1	コロジク	ROLLER SHAFT	
4-4	014760622	1	アナトメネジ5.95	SET SCREW, SOCKET SM5.95	
6	014760622	1	アナトメネジ5.95	SET SCREW, SOCKET SM5.95	
7	152760051	1	タテオクリレバージク	TACK WIDTH FEED LEVER SHAFT	
8	048180142	1	トメワジクヨウC18	RETAINING RING, EXTERNAL C18	
9	152756001	2	スラストザガネ18	WASHER, THRUST 18	
10	014760622	1	アナトメネジ5.95	SET SCREW, SOCKET SM5.95	
11	S37937001	1	オクリカムブラケット	FEED CAM BRACKET	
12	S37938001	1	オクリカムX	FEED CAM, X	
13	014760622	2	アナトメネジ5.95	SET SCREW, SOCKET SM5.95	
14	S37939001	1	カムジク	CAM SHAFT	
15	048060342	1	トメワE6	RETAINING RING, E6	
16	070688850	2	タマジクウケ688ZZNR	BALL BEARING, 688ZZNR	
17	S37940001	2	イチギメピン	POSITIONING PIN	
18	062681012	2	ナベコ437-40X10	SCREW, PAN SM4.37-40X10	
19	S37937001	1	オクリカムブラケット	FEED CAM BRACKET	
20	S37941001	1	オクリカムY	FEED CAM, Y	
21	014760622	2	アナトメネジ5.95	SET SCREW, SOCKET SM5.95	
22	S37939001	1	カムジク	CAM SHAFT	
23	048060342	1	トメワE6	RETAINING RING, E6	
24	070688850	2	タマジクウケ688ZZNR	BALL BEARING, 688ZZNR	
25	S37940001	2	イチギメピン	POSITIONING PIN	
26	062681012	2	ナベコ437-40X10	SCREW, PAN SM4.37-40X10	
27	S37942100	2	カップリングハブ8	COUPLING HUB, 8	
28	S37943100	2	カップリングハブ6.3	COUPLING HUB, 6.35	
29	S37944000	2	カップリングスペーサ	COUPLING SPACER	
30	014760622	8	アナトメネジ5.95	SET SCREW, SOCKET SM5.95	
33	S49590001	2	オクリゲンテントグ	FEED HOME POSITION DOG	
34	060300512	2	バインドM3X5	SCREW, BIND M3X5	
35	S49683001	2	ゲンテンセンサートリツケイタ	HOME SENSOR SETTING PLATE	
36	062680612	2	ナベコ4.37-40X6	SCREW, PAN SM4.37-40X6	
49	S23337001	1	ゴムセン18.5	RUBBER CAP, 18.5	

C2 . 送り関係 (KE-430C) / Feed mechanism (KE-430C)

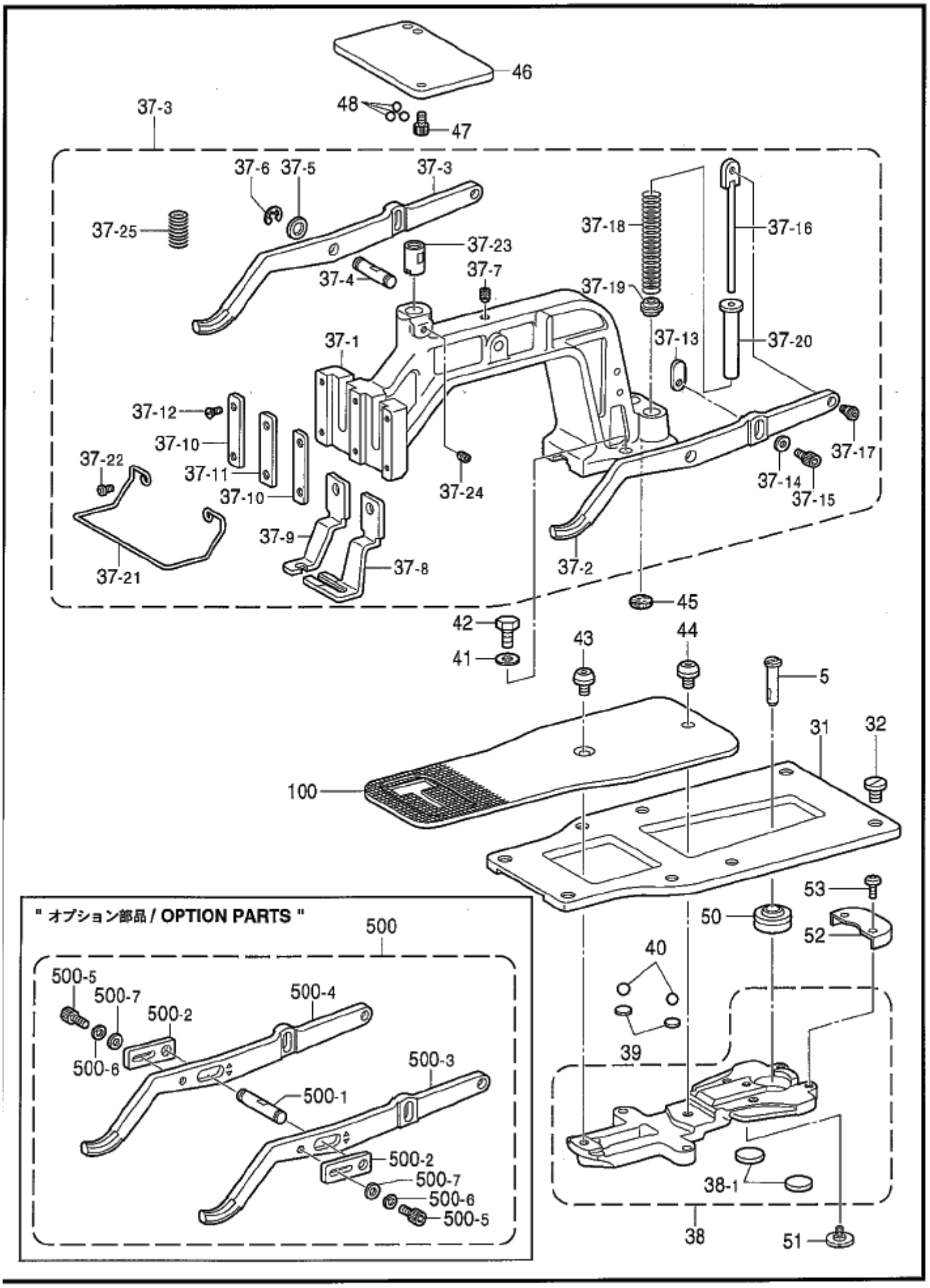

118-V30-202

C2 . 送り関係 (KE-430C) / Feed mechanism (KE-430C)

REF.NO	CODE	Q'TY	ヒンメイ	NAME OF PARTS	RM
5	S59915001	1	ﾀﾃｵｸﾘｼﾞｸ	TACK WIDTH FEED SHAFT	
31	S59916001	1	ｵｸﾘﾀﾞｲｱﾝﾅｲﾀ	FEED BRACKET GUIDE PLATE	
32	145318001	8	ｼﾒﾈｼﾞ4.37	SCREW, SM4.37	
37	*	1	ｵｻｴｳﾃﾞｸﾐ	WORK CLAMP ARM ASSY,	
37-1	S49592200	1	ｵｻｴｳﾃﾞ	WORK CLAMP ARM	
37-2	S37949101	1	ｵｻｴｳﾃﾞﾚﾊﾞｰR	WORK CLAMP ARM LEVER, R	
37-3	S37950101	1	ｵｻｴｳﾃﾞﾚﾊﾞｰL	WORK CLAMP ARM LEVER, L	
37-4	S34839001	1	ｵｻｴｳﾃﾞﾚﾊﾞｰｼﾞｸ	WORK CLAMP ARM LEVER SHAFT	
37-5	116629001	2	ｻﾞｶﾞﾈ	WASHER	
37-6	048050342	2	ﾄﾒﾜE5	RETAINING RING, E5	
37-7	014760622	1	ｱﾅﾄﾒﾈｼﾞ5.95	SET SCREW, SOCKET SM5.95	
37-8	*	1	ｵｻｴｱｼR	WORK CLAMP RIGHT	
37-9	*	1	ｵｻｴｱｼL	WORK CLAMP LEFT	
37-10	152783001	2	ｵｻｴｱｼｵｻｴｲﾀA	WORK CLAMP GUIDE BRACKET, A	
37-11	152784001	1	ｵｻｴｱｼｵｻｴｲﾀB	WORK CLAMP GUIDE BRACKET, B	
37-12	107038003	4	ｻﾗﾈｼﾞ3.57	SCREW, FLAT SM3.57	
37-13	S37951101	2	ｵｻｴｳﾃﾞﾚﾊﾞｰｲﾀ	WORK CLAMP ARM LEVER PLATE	
37-14	146354001	2	ｻﾞｶﾞﾈ	WASHER, PLAIN 5	
37-15	018500822	2	ｱﾅﾎﾞﾙﾄ5X8	BOLT, SOCKET M5X8	
37-16	153570101	2	ｵｻｴﾊﾞﾈｱﾝﾅｲﾛｯﾄﾞ	PRESSER SPRING GUIDE ROD	
37-17	145478101	2	ﾀﾞﾝﾈｼﾞ4.76	SHOULDER SCREW, SOCKET SM4.76	
37-18	S48646001	2	ｵｻｴﾊﾞﾈD	PRESSER SPRING, D	
37-19	152788000	2	ｵｻｴﾊﾞﾈｶﾝｻﾞ	PRESSER SPRING SPACER	
37-20	153567000	2	ｵｻｴﾊﾞﾈｶﾗｰ	PRESSER SPRING COLLAR	
37-21	156495201	1	ﾌｨﾝｶﾞｰｶﾞｰﾄﾞ	FINGER GUARD	
37-22	062671012	2	ﾅﾍﾞｺ357-40X10	SCREW, PAN SM3.57-40X10	
37-23	S49595001	1	ｵｻｴｳﾃﾞｻｻｴｼﾞｸ	WORK CLAMP ARM SUPPORT SHAFT	
37-24	014760622	1	ｱﾅﾄﾒﾈｼﾞ5.95	SET SCREW, SOCKET SM5.95	
37-25	S59927001	1	ｻｻｴｼﾞｸｵｼﾊﾞﾈ	SUPPORT SHAFT PUSH SPRING	
38	S59918001	1	ｵｸﾘﾀﾞｲｸﾐ	FEED BRACKET ASSY	
38-1	152771000	2	ｵｸﾘﾀﾞｲｶﾝｻﾞ	FEED BRACKET SPACER	
39	S59921001	2	ｶﾝｻﾞ4.8	SPACER, 4.8	
40	071047650	2	ｺｳｷｭｳ3/16	BEARING BALL, 3/16	
41	025060232	2	ﾋﾗｻﾞｶﾞﾈﾁｭｳ6	WASHER, PLAIN M 6	
42	017761412	2	ﾎﾞﾙﾄ5.95X14	BOLT, SM5.95X14	
43	S49955001	1	ｵｸﾘｲﾀｼﾒﾈｼﾞ	SCREW, W/SOCKET SM4.37	
44	153057101	1	ｵｸﾘｲﾀｼﾒﾈｼﾞ	SCREW, W/SOCKET SM4.37	
45	153035000	1	ｵｻｴｳﾃﾞﾌｪﾙﾄ	WORK CLAMP FELT	
46	S59917001	1	ｵｻｴｳﾃﾞｻｻｴｲﾀ	WORK CLAMP ARM SUPPORT PLATE	
47	018400822	2	ｱﾅﾎﾞﾙﾄ4X8	BOLT, SOCKET M4X8	
48	071039750	3	ｺｳｷｭｳ5/32	BEARING BALL, 5/32	
50	S59919000	1	ﾛｯﾄﾞｴﾝﾄﾞPB-8	ROD END, PB-8	
51	S10209101	1	ｼﾒﾈｼﾞ4.37	SCREW, SM4.37	
52	S59923000	1	ｵｸﾘﾀﾞｲｶﾊﾞｰR	FEED BRACKET COVER, R	
53	060680512	2	ﾊﾞｲﾝﾄﾞ437-40X5	SCREW, BIND SM4.37-40X5	
100	*	1	ｵｸﾘｲﾀ	FEED PLATE	
			″ オプション部品 ″	″ OPTION PARTS ″	
500	S41328101	1	ｵｻｴｸｲｯｸﾁｪﾝｼﾞｾｯﾄ	WORK CLAMP QUICK CHANGE SET	
500-1	S41324001	1	QCｵｻｴｳﾃﾞﾚﾊﾞｰｼﾞ	QC-WORK CLAMP ARM LEVER SHAFT	
500-2	S41325001	2	QCﾚﾊﾞｰｼﾞｸｻｻｴ	QC-WORK CLAMP LEVER SUPPORT	
500-3	S41326101	1	QCｵｻｴｳﾃﾞﾚﾊﾞｰR	QC-WORK CLAMP ARM LEVER, R	
500-4	S41327101	1	QCｵｻｴｳﾃﾞﾚﾊﾞｰL	QC-WORK CLAMP ARM LEVER, L	
500-5	018501022	2	ｱﾅﾎﾞﾙﾄ5X10	BOLT, SOCKET M5X10	
500-6	028050242	2	ﾊﾞﾈｻﾞｶﾞﾈ2-5	WASHER, SPRING 2-5	
500-7	025050232	2	ﾋﾗｻﾞｶﾞﾈﾁｭｳ5	WASHER, PLAIN M 5	

C3．送り関係 (KE-431C) / Feed mechanism (KE-431C)

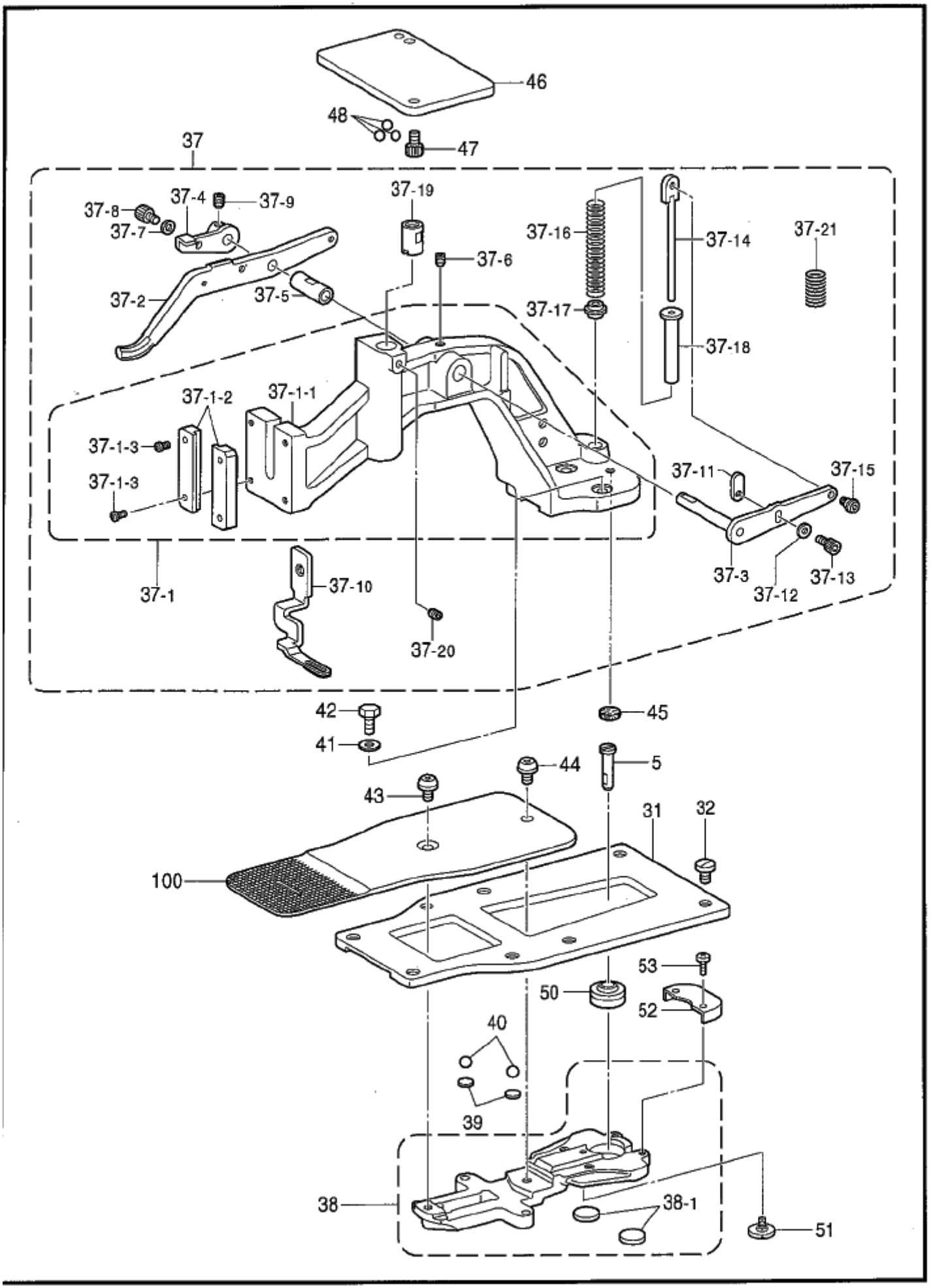

118-V30-202

C3 . 送り関係 (KE-431C) / Feed mechanism (KE-431C)

REF.NO	CODE	Q'TY	ヒンメイ	NAME OF PARTS	RM
5	S59915001	1	ﾀﾃｵｸﾘｼﾞｸ	TACK WIDTH FEED SHAFT	
31	S59916001	1	ｵｸﾘﾀﾞｲｱﾝﾅｲﾀ	FEED BRACKET GUIDE PLATE	
32	145318001	8	ｼﾒﾈｼﾞ4.37	SCREW, SM4.37	
37	*	1	ｵｻｴｳﾃﾞｸﾐ431	WORK CLAMP ASSY, 431	
37-1	S51849101	1	ｵｻｴｳﾃﾞｸﾐｺ	WORK CLAMP ARM ASSY	
37-1-1	159825200	1	ｵｻｴｳﾃﾞ431	WORK CLAMP ARM, 431	
37-1-2	159827001	2	ｵｻｴｱｼｵｻｴｲﾀB	WORK CLAMP GUIDE BRACKET, B	
37-1-3	062671212	4	ﾅﾍﾞｺ357-40X12	SCREW, PAN SM3.57-40X12	
37-2	154413001	1	ｵｻｴｳﾃﾞﾚﾊﾞ-A	WORK CLAMP LEVER, A	
37-3	S41230001	1	ｵｻｴｳﾃﾞﾚﾊﾞ-B	WORK CLAMP LEVER, B	
37-4	154415001	1	ｵｻｴｳﾃﾞﾚﾊﾞ-C	WORK CLAMP LEVER, C	
37-5	153944001	1	ﾚﾊﾞ-ｼﾞｸﾒﾀﾙ	LEVER SHAFT BUSH	
37-6	014760622	1	ｱﾅﾄﾒﾈｼﾞ5.95	SET SCREW, SOCKET SM5.95	
37-7	140407002	1	ｻﾞｶﾞﾈ	WASHER	
37-8	018500822	1	ｱﾅﾎﾞﾙﾄ5X8	BOLT, SOCKET M5X8	
37-9	014770622	2	ｱﾅﾄﾒﾈｼﾞ6.35ｸﾎﾞﾐ	SET SCREW, SOCKET (CP) SM6.35	
37-10	*	1	ｵｻｴｱｼ431	WORK CLAMP, 431	
37-11	S37951101	1	ｵｻｴｳﾃﾞﾚﾊﾞ-ｲﾀ	WORK CLAMP ARM LEVER PLATE	
37-12	140407002	1	ｻﾞｶﾞﾈ	WASHER	
37-13	018500822	1	ｱﾅﾎﾞﾙﾄ5X8	BOLT, SOCKET M5X8	
37-14	159828101	1	ｵｻｴﾊﾞﾈｱﾝﾅｲﾛｯﾄﾞB	SPRING GUIDE ROD, B	
37-15	145478101	1	ﾀﾞﾝﾈｼﾞ4.76	SHOULDER SCREW, SOCKET SM4.76	
37-16	153569001	1	ｵｻｴﾊﾞﾈB	PRESSER SPRING, B	
37-17	152788000	1	ｵｻｴﾊﾞﾈｶﾝｻﾞ	PRESSER SPRING SPACER	
37-18	153567000	1	ｵｻｴﾊﾞﾈｶﾗ-	PRESSER SPRING COLLAR	
37-19	S49595001	1	ｵｻｴｳﾃﾞｻｻｴｼﾞｸ	WORK CLAMP ARM SUPPORT SHAFT	
37-20	014760622	1	ｱﾅﾄﾒﾈｼﾞ5.95	SET SCREW, SOCKET SM5.95	
37-21	S59927001	1	ｻｻｴｼﾞｸｵｼﾊﾞﾈ	SUPPORT SHAFT PUSH SPRING	
38	S59918001	1	ｵｸﾘﾀﾞｲｸﾐ	FEED BRACKET ASSY	
38-1	152771000	2	ｵｸﾘﾀﾞｲｶﾝｻﾞ	FEED BRACKET SPACER	
39	S59921001	2	ｶﾝｻﾞ4.8	SPACER, 4.8	
40	071047650	2	ｺｳｷｭｳ3/16	BEARING BALL, 3/16	
41	025060232	2	ﾋﾗｻﾞｶﾞﾈﾁｭｳ6	WASHER, PLAIN M 6	
42	017761412	2	ﾎﾞﾙﾄ5.95X14	BOLT, SM5.95X14	
43	S49955001	1	ｵｸﾘｲﾀｼﾒﾈｼﾞ	SCREW, W/SOCKET SM4.37	
44	153057101	1	ｵｸﾘｲﾀｼﾒﾈｼﾞ	SCREW, W/SOCKET SM4.37	
45	153035000	1	ｵｻｴｳﾃﾞﾌｪﾙﾄ	WORK CLAMP FELT	
46	S59917001	1	ｵｻｴｳﾃﾞｻｻｴｲﾀ	WORK CLAMP ARM SUPPORT PLATE	
47	018400822	2	ｱﾅﾎﾞﾙﾄ4X8	BOLT, SOCKET M4X8	
48	071039750	3	ｺｳｷｭｳ5/32	BEARING BALL, 5/32	
50	S59919000	1	ﾛｯﾄﾞｴﾝﾄﾞPB-8	ROD END, PB-6	
51	S10209101	1	ｼﾒﾈｼﾞ4.37	SCREW, SM4.37	
52	S59923000	1	ｵｸﾘﾀﾞｲｶﾊﾞ-R	FEED BRACKET COVER, R	
53	060680512	2	ﾊﾞｲﾝﾄﾞ437-40X5	SCREW, BIND SM4.37-40X5	
100	*	1	ｵｸﾘｲﾀ431	FEED PLATE, 431	

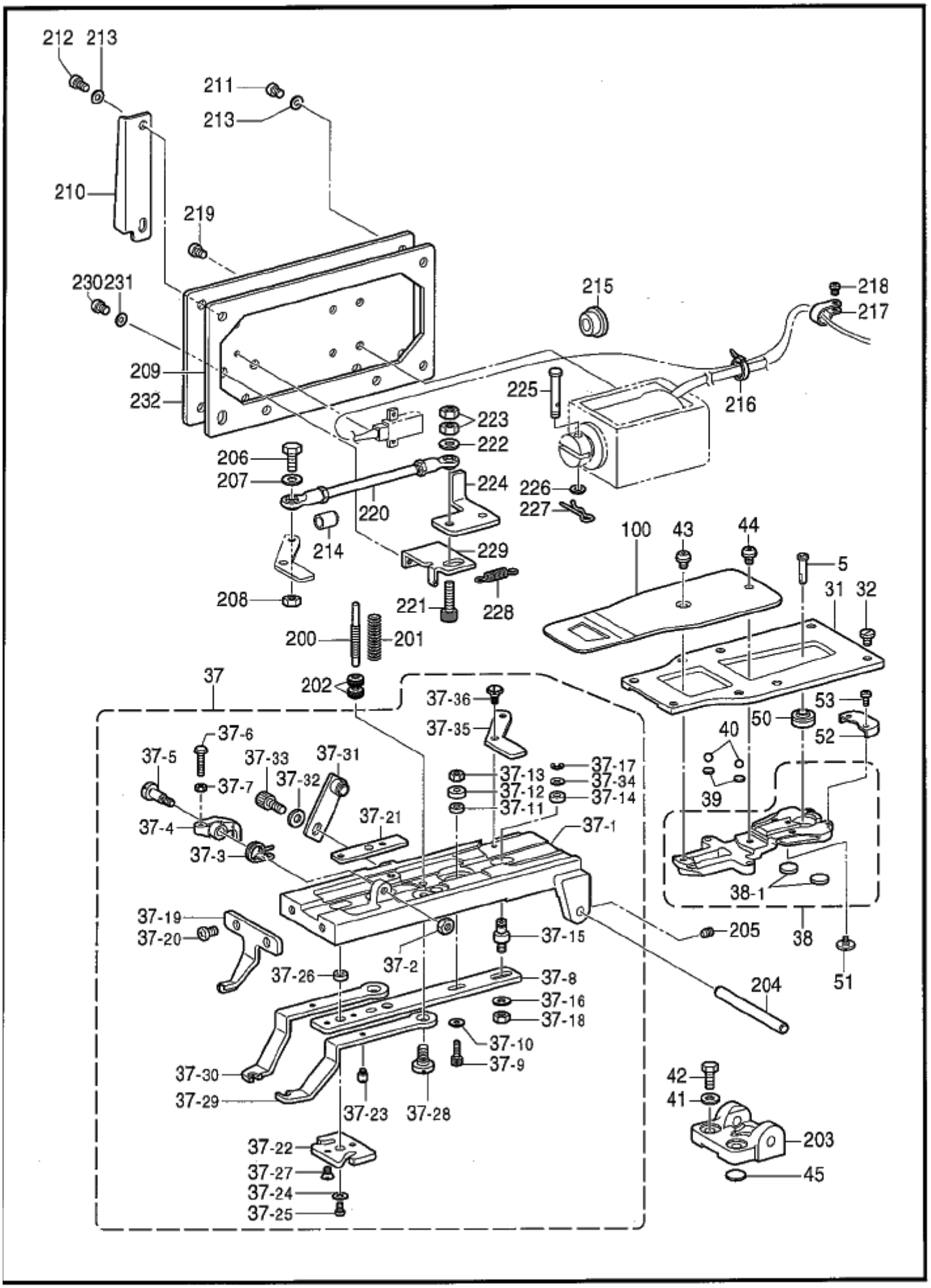
212
213
211
213
210
219
230231
209
232
215
218
217
225
216
223
222
206
207
224
226
227
220
214
229
208
221
228
200
201
100
43
44
5
31
32
37
202
37-36
37-35
53
50
52
40
39
37-6
37-5
37-33
37-31
37-7
37-32
37-13
37-17
37-34
37-12
37-14
37-11
37-21
37-4
37-1
37-3
38-1
37-19
37-20
37-15
205
38
37-2
37-26
37-8
204
51
37-16
37-18
37-10
37-9
37-30
37-29
37-23
37-28
42
41
203
37-22
37-27
37-24
37-25
45

118-V30-202

C4 . 送り関係 (KE-432C) / Feed mechanism (KE-432C)

REF.NO	CODE	Q'TY	ヒンメイ	NAME OF PARTS	RM
5	S59915001	1	ﾀﾃｵｸﾘｼﾞｸ	TACK WIDTH FEED SHAFT	
31	S59916001	1	ｵｸﾘﾀﾞｲｱﾝﾅｲｲﾀ	FEED BRACKET GUIDE PLATE	
32	145318001	8	ｼﾒﾈｼﾞ4.37	SCREW, SM4.37	
37	S41024100	1	ｵｻｴｳﾃﾞｸﾐZ32	WORK CLAMP ARM ASSY, Z32	
37-1	S41025100	1	ｵｻｴﾌﾚｰﾑZ32	WORK CLAMP FRAME, Z32	
37-2	150553001	1	ﾅｯﾄ5.95	NUT, SM5.95	
37-3	118258001	1	ｽﾄｯﾌﾟﾚﾊﾞｰﾊﾞﾈ	STOP LEVER SPRING	
37-4	118256001	1	ｽﾄｯﾌﾟﾚﾊﾞｰ	STOP LEVER	
37-5	118257001	1	ﾀﾞﾝﾈｼﾞ5.95	SHOULDEER SCREW, SM5.95	
37-6	118259001	1	ﾎﾞﾙﾄ4.37	BOLT, SM4.37	
37-7	021680202	1	ﾅｯﾄ2ｼｭ4.37	NUT, 2 SM4.37	
37-8	155562101	1	ｵｻｴﾖｾﾚﾝｹﾂｲﾀ	WORK CLAMP CARRIER PLATE	
37-9	018401622	1	ｱﾅﾎﾞﾙﾄ4X16	BOLT, SOCKET M4X16	
37-10	025710232	1	ﾋﾗｻﾞｶﾞﾈﾁｭｳ4.76	WASHER, PLAIN M 4.76	
37-11	118247001	1	ｶﾗｰ	COLLAR	
37-12	156170001	1	ｶﾗｰ	COLLAR	
37-13	021400102	1	ﾅｯﾄ1ｼｭ4	NUT, 1 M4	
37-14	155576001	1	ｵｻｴﾖｾｺﾛ	ROLLER	
37-15	155577001	1	ｺﾛｼﾞｸﾂｷﾈｼﾞ4.76	SCREW, SM4.76	
37-16	025710232	1	ﾋﾗｻﾞｶﾞﾈﾁｭｳ4.76	WASHER, PLAIN M 4.76	
37-17	048040342	1	ﾄﾒﾜE4	RETAINING RING, E4	
37-18	021710212	1	ﾅｯﾄ2ｼｭ4.76	NUT, 2 SM4.76	
37-19	S41265001	1	ﾎﾞﾀﾝﾎｰﾙｱﾝﾅｲZ32	BUTTON HOLE GUIDE, Z32	
37-20	062761012	2	ﾅﾍﾞｺ595-28X10	SCREW, PAN SM5.95-28X10	
37-21	118248101	1	ｽﾄｯﾌﾟｲﾁﾁｮｳｾﾂｲﾀ	STOP POSITION ADJUSTING PLATE	
37-22	S41288001	1	ｵｻｴｱﾝﾅｲｲﾀZ32	WORK CLAMP GUIDE PLATE, Z32	
37-23	118252001	2	ｵｻｴｱﾝﾅｲﾈｼﾞ	SCREW	
37-24	025710132	2	ﾋﾗｻﾞｶﾞﾈｼｮｳ4.76	WASHER, PLAIN S 4.76	
37-25	062681212	2	ﾅﾍﾞｺ437-40X12	SCREW, PAN SM4.37-40X12	
37-26	118247001	2	ｶﾗｰ	COLLAR	
37-27	117143001	2	ｻﾗﾈｼﾞ4.37	SCREW, FLAT SM4.37	
37-28	118244001	2	ﾀﾞﾝﾈｼﾞ5.95	SHOULDER SCREW, SM5.95	
37-29	118249001	1	ｵｻｴR	WORK CLAMP, R	
37-30	118250001	1	ｵｻｴL	WORK CLAMP, L	
37-31	S06533001	1	ｵｻｴﾁｮｳｾﾂｲﾀｸﾐ	PRESSER ADJUSTING PLATE ASSY	
37-32	025060232	1	ﾋﾗｻﾞｶﾞﾈﾁｭｳ6	WASHER, PLAIN M 6	
37-33	018061022	1	ｱﾅﾎﾞﾙﾄ6X10	BOLT, SOCKET M6X10	
37-34	025710132	1	ﾋﾗｻﾞｶﾞﾈｼｮｳ4.76	WASHER, PLAIN S 4.76	
37-35	S41011001	1	ｵｻｴﾖｾﾚﾊﾞｰ	LEVER	
37-36	123882001	1	ﾀﾞﾝﾈｼﾞ4.37	SHOULDER SCREW, SM4.37	
38	S59918001	1	ｵｸﾘﾀﾞｲｸﾐ	FEED BRACKET ASSY	
38-1	152771000	2	ｵｸﾘﾀﾞｲｶﾝｻﾞ	FEED BRACKET SPACER	
39	S59921001	2	ｶﾝｻﾞ4.8	SPACER, 4.8	
40	071047650	2	ｺｳｷｭｳ3/16	BEARING BALL, 3/16	
41	025060232	2	ﾋﾗｻﾞｶﾞﾈﾁｭｳ6	WASHER, PLAIN M 6	
42	017761212	2	ﾎﾞﾙﾄ5.95X12	BOLT, SM5.95X12	
43	S49955001	1	ｵｸﾘｲﾀｼﾒﾈｼﾞ	SCREW, W/SOCKET SM4.37	
44	153057101	1	ｵｸﾘｲﾀｼﾒﾈｼﾞ	SCREW, W/SOCKET SM4.37	
45	153035000	1	ｵｻｴｳﾃﾞﾌｪﾙﾄ	WORK CLAMP FELT	
50	S59919000	1	ﾛｯﾄﾞｴﾝﾄﾞPB-8	ROD END, PB-6	
51	S10209101	1	ｼﾒﾈｼﾞ4.37	SCREW, SM4.37	
52	S59923000	1	ｵｸﾘﾀﾞｲｶﾊﾞｰR	FEED BRACKET COVER, R	
53	060680512	2	ﾊﾞｲﾝﾄﾞ437-40X5	SCREW, BIND SM4.37-40X5	
100	S51084001	1	ｵｸﾘｲﾀ432	FEED PLATE, 432	
200	155567001	1	ｵｻｴﾊﾞﾈﾁｮｳｾﾂﾈｼﾞ	ADJUSTING SCREW	
201	115147001	1	ﾎﾞﾀﾝﾂｶﾐｵｻｴｵｼﾊﾞﾈ	COMPRESSION SPRING	
202	146994001	2	ｵｻｴﾊﾞﾈﾁｮｳｼﾈｼﾞ	NUT, ROUND SM6.35-40	
203	153834101	1	ﾎﾞﾀﾝﾂｶﾐﾎﾙﾀﾞｰｻｻｴ	BUTTON CLAMP HOLDER SUPPORT	
204	153827001	1	ﾎﾞﾀﾝﾂｶﾐﾎﾙﾀﾞｰｼﾞｸ	BUTTON CLAMP HOLDER SHAFT	
205	014680622	2	ｱﾅﾄﾒﾈｼﾞ4.37ｸﾎﾞﾐ	SET SCREW, SOCKET (CP) SM4.37	

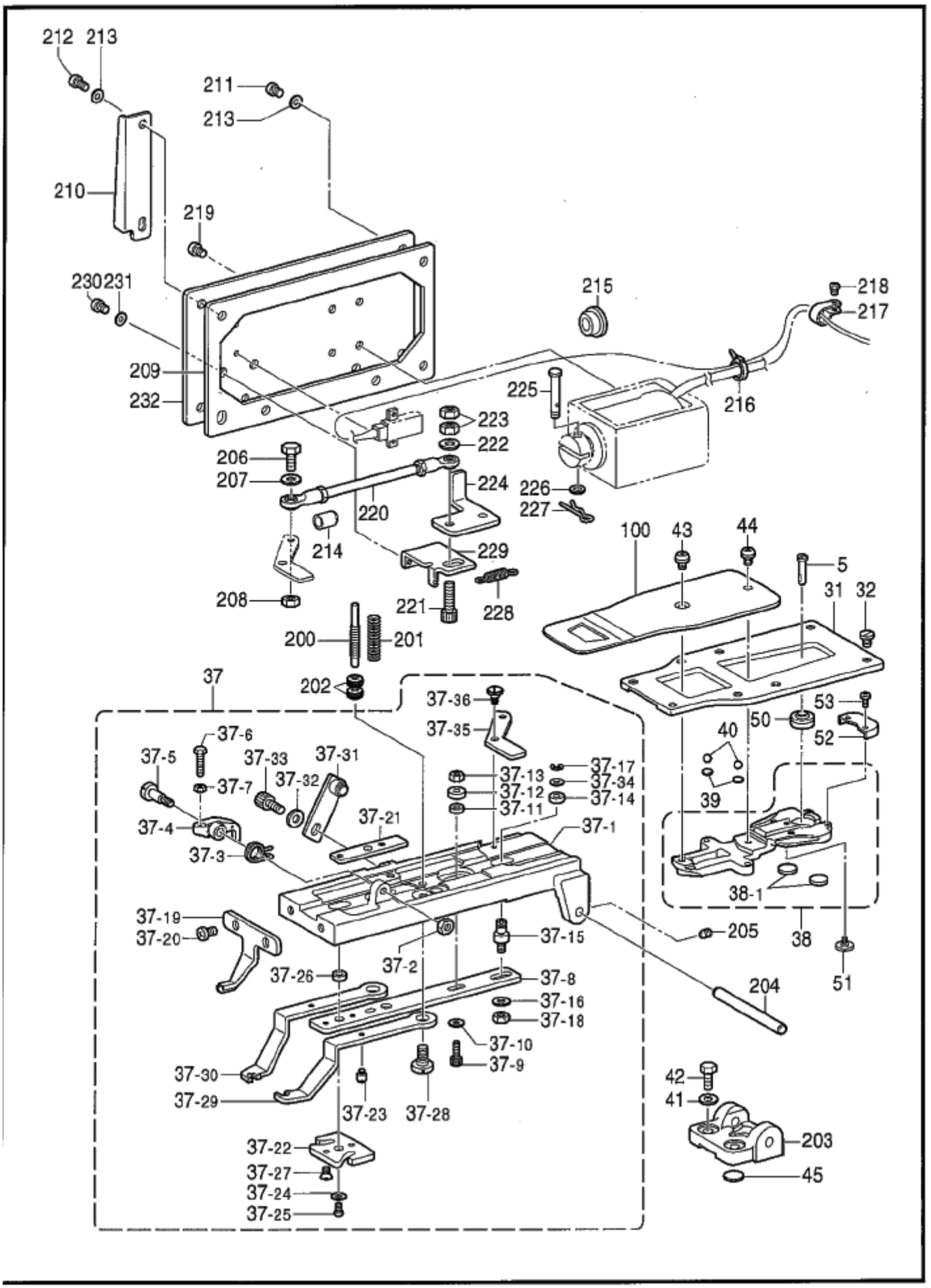
212
213
211
213
210
219
230231
209
232
215
218
217
225
216
223
222
206
207
224
226
227
220
214
229
208
221
228
200
201
100
43
44
5
31
32
37
202
37-36
37-35
53
50
52
40
39
37-6
37-5
37-33
37-31
37-7
37-32
37-13
37-17
37-34
37-12
37-14
37-11
37-21
37-4
37-1
37-3
38-1
37-19
37-20
37-15
205
38
37-2
37-26
37-8
204
51
37-16
37-18
37-10
37-9
37-30
37-29
37-23
37-28
42
41
203
37-22
37-27
37-24
37-25
45

118-V30-202

C4 . 送り関係 (KE-432C) / Feed mechanism (KE-432C)

REF.NO	CODE	Q'TY	ヒンメイ	NAME OF PARTS	RM
206	017781412	1	ﾎﾞﾙﾄ6.35X14	BOLT, SM6.35X14	
207	118735002	1	ｻﾞｶﾞﾈ	WASHER, PLAIN	
208	150556001	1	ﾅｯﾄ6.35	NUT, SM6.35	
209	S41290301	1	OYSﾄﾘｯｹｲﾀﾊﾟｯｷﾝ	OYS SETTING PLATE PACKING	
210	S41060109	1	ﾒｶｸｼｲﾀ	BLIND PLATE	
211	062710812	2	ﾅﾍﾞｺ476-32X8	SCREW, PAN SM4.76-32X8	
212	062711012	2	ﾅﾍﾞｺ476-32X10	SCREW, PAN SM4.76-32X10	
213	025710232	4	ﾋﾗｻﾞｶﾞﾈﾁｭｳ4.76	WASHER, PLAIN M 4.76	
214	152827001	1	ｵｲﾙｷﾘｾﾝ	OIL CAP	
215	S23337001	1	ｺﾞﾑｾﾝ18.5	RUBBER CAP, 18.5	
216	228475000	1	ｹﾂｿｸﾊﾞﾝﾄﾞ1.9X80	FASTENING BAND, 1.9X80	
217	525664000	1	ｺｰﾄﾞﾎﾙﾀﾞ#6	CORD HOLDER, 6N	
218	062680612	1	ﾅﾍﾞｺ4.37-40X6	SCREW, PAN SM4.37-40X6	
219	062710812	2	ﾅﾍﾞｺ476-32X8	SCREW, PAN SM4.76-32X8	
220	S41264001	1	ｵｻｴﾖｾﾛｯﾄﾞｸﾐ	WORK CLAMP CARRIER ROD ASSY	
221	018062036	1	ｱﾅﾎﾞﾙﾄ6X20	BOLT, SOCKET M6X20	
222	118735002	1	ｻﾞｶﾞﾈ	WASHER, PLAIN	
223	021060306	2	3ｼｭﾅｯﾄ6	NUT, 3 M6	
224	S41010001	1	ｾﾝｻｲﾀ	SENSOR PLATE	
225	S41012001	1	OYｿﾚﾉｲﾄﾞﾋﾟﾝ	OY SOLENOID PIN	
226	140407001	1	ｻﾞｶﾞﾈ	WASHER	
227	S19662001	1	ｽﾅｯﾌﾟﾋﾟﾝ5	SNAP PIN, 5	
228	S18523001	1	ｵｻｴｱｹﾞﾊﾞﾈ	SPRING, EXTENSION	
229	S41009001	1	OYｿﾚﾉｲﾄﾞｽﾄｯﾊﾟｰ	OY SOLENOID STOPPER	
230	062710812	2	ﾅﾍﾞｺ476-32X8	SCREW, PAN SM4.76-32X8	
231	025710232	2	ﾋﾗｻﾞｶﾞﾈﾁｭｳ4.76	WASHER, PLAIN M 4.76	
232	S52098201	1	OYｿﾚﾉｲﾄﾞﾄﾘｯｹｲﾀ	OY SOLENOID SETTING PLATE	

D1．押エ上ゲ関係 / Work clamp lifter mechanism

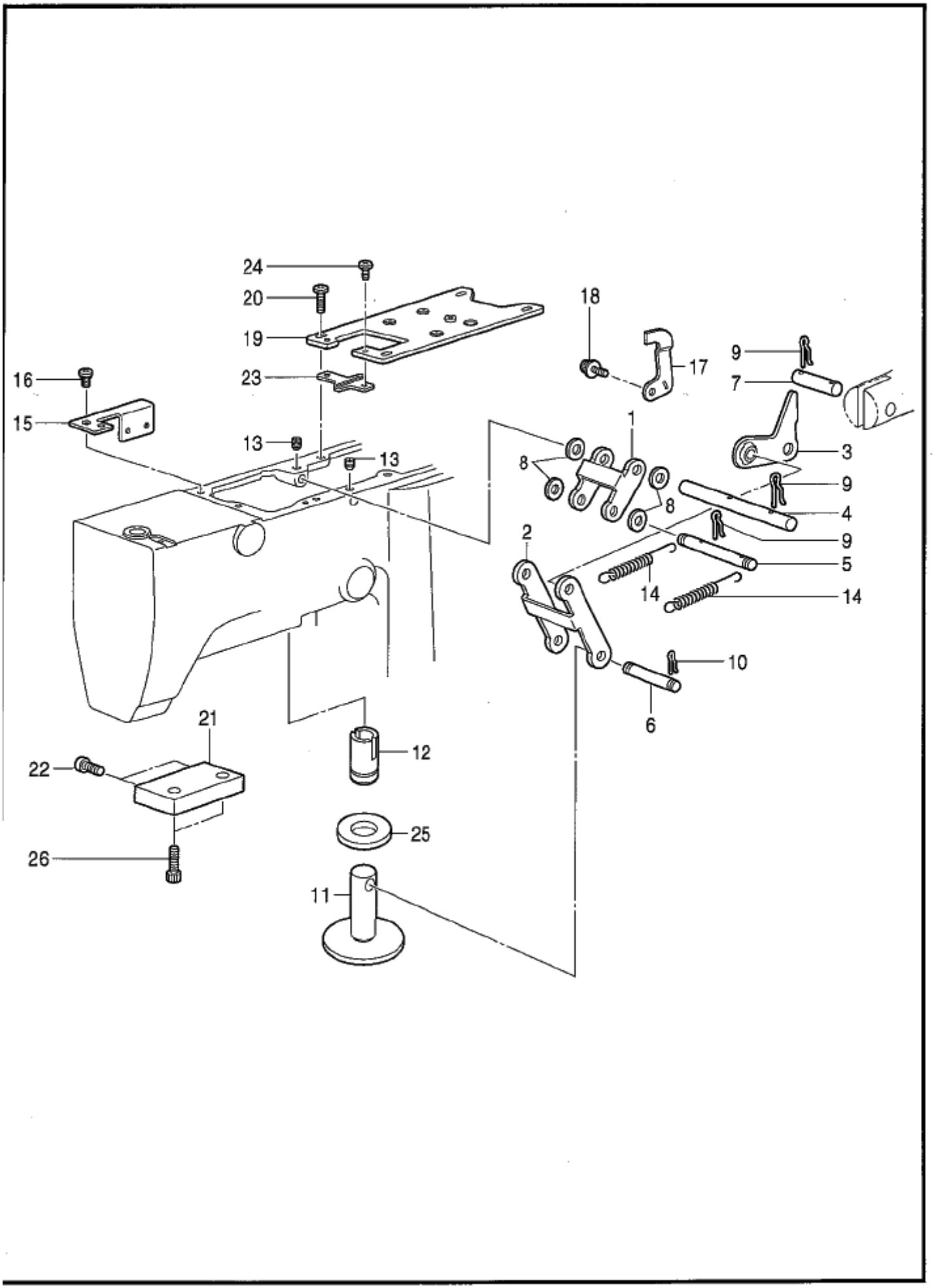

118-V30-204

D1 . 押エ上ゲ関係 (KE-430C, KE-431C) / Work clamp lifter mechanism (KE-430C, KE-431C)

REF.NO	CODE	Q'TY	ヒンメイ	NAME OF PARTS	RM
1	S49630001	1	ﾘﾝｸA	LINK, A	
2	S49631001	1	ﾘﾝｸB	LINK, B	
3	S49632001	1	ﾘﾝｸCｸﾐ	LINK ASSY, C	
4	S49635001	1	ﾘﾝｸｼﾞｸA	LINK SHAFT, A	
5	S49636001	1	ﾘﾝｸｼﾞｸB	LINK SHAFT, B	
6	S49637001	1	ﾘﾝｸｼﾞｸC	LINK SHAFT, C	
7	S49638001	1	ﾘﾝｸｼﾞｸD	LINK SHAFT, D	
8	100281001	4	ｻﾞｶﾞﾈ	WASHER, PLAIN	
9	S37968001	6	ｽﾅｯﾌﾟﾋﾟﾝ8	SNAP PIN, 8	
10	S19662001	2	ｽﾅｯﾌﾟﾋﾟﾝ5	SNAP PIN, 5	
11	S58890001	1	ｵｻｴｲﾀ	WORK CLAMP PLATE	
12	S55157000	1	ｵｻｴｲﾀﾖｳﾒﾀﾙ	BUSH	
13	014760622	2	ｱﾅﾄﾒﾈｼﾞ5.95	SET SCREW, SOCKET SM5.95	
14	S10105001	2	ﾘﾝｸﾓﾄﾞｼﾊﾞﾈ	SPRING, EXTENSION	
15	S49639001	1	ｾﾝｻﾄﾘｯｹﾀﾞｲ	SENSOR SETTING BASE	
16	062680612	1	ﾅﾍﾞｺ4.37-40X6	SCREW, PAN SM4.37-40X6	
17	S49640101	1	ｾﾝｻｶﾝﾁｲﾀ	SENSOR PERCEIVE PLATE	
18	S55479001	1	ｱﾅﾎﾞﾙﾄｻﾞｸﾐ4X8	BOLT, SOCKET (S/P WASHER) M4X8	
19	S49641001	1	ｿﾚﾉｲﾄﾞﾄﾘｯｹｲﾀA	SOLENOID SETTING PLATE, A	
20	060681212	4	ﾊﾞｲﾝﾄﾞ437-40X12	SCREW, BIND SM4.37-40X12	
21	S49642001	1	ｿﾚﾉｲﾄﾞﾄﾘｯｹｲﾀB	SOLENOID SETTING PLATE, B	
22	060501016	2	ﾊﾞｲﾝﾄﾞM5X10	SCREW, BIND M5X10	
23	S49643001	1	ｶﾞｲﾄﾞ	GUIDE	
24	060680712	2	ﾊﾞｲﾝﾄﾞ437-40X7	SCREW, BIND SM4.37-40X7	
25	S59763000	1	ｵｻｴｱｹﾞｽﾄｯﾊﾟｰｺﾞﾑ	W-CLAMP LIFTER STOPPER RUBBER	
26	018501422	2	ｱﾅﾎﾞﾙﾄ5X14	BOLT, SOCKET M5X14	

D2 . 押エ上ゲ関係 (KE-432C) / Work clamp lifter mechanism (KE-432C)

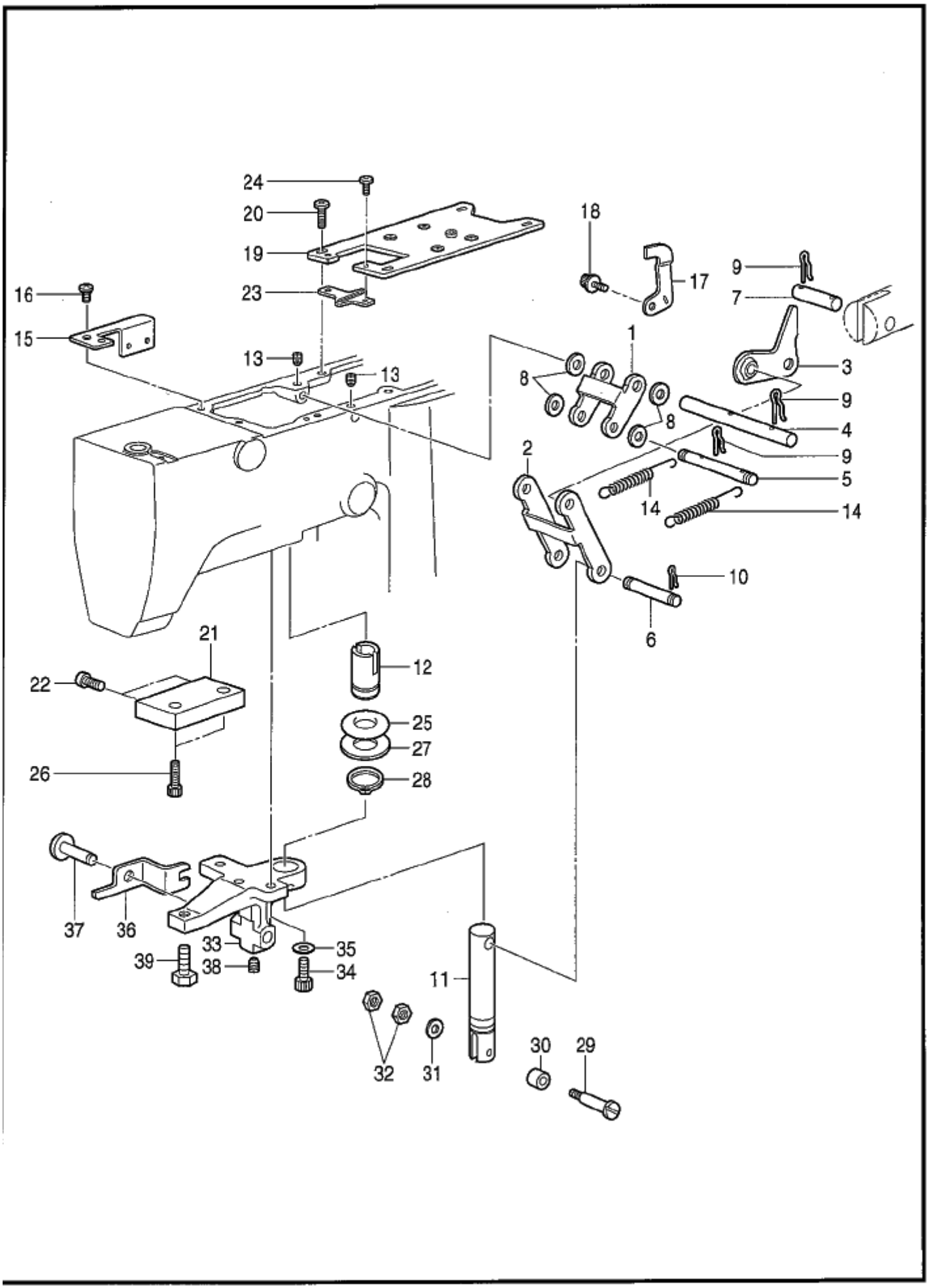

118-V32-204

D2 . 押エ上ゲ関係 (KE-432C) / Work clamp lifter mechanism (KE-432C)

REF.NO	CODE	Q'TY	ヒンメイ	NAME OF PARTS	RM
1	S49630001	1	ﾘﾝｸA	LINK, A	
2	S49631001	1	ﾘﾝｸB	LINK, B	
3	S49632001	1	ﾘﾝｸCｸﾐ	LINK ASSY, C	
4	S49635001	1	ﾘﾝｸｼﾞｸA	LINK SHAFT, A	
5	S49636001	1	ﾘﾝｸｼﾞｸB	LINK SHAFT, B	
6	S49637001	1	ﾘﾝｸｼﾞｸC	LINK SHAFT, C	
7	S49638001	1	ﾘﾝｸｼﾞｸD	LINK SHAFT, D	
8	100281001	4	ｻﾞｶﾞﾈ	WASHER, PLAIN	
9	S37968001	6	ｽﾅｯﾌﾟﾋﾟﾝ8	SNAP PIN, 8	
10	S19662001	2	ｽﾅｯﾌﾟﾋﾟﾝ5	SNAP PIN, 5	
11	S41015101	1	ｵｻｴｱｹﾞﾛｯﾄﾞ	WORK CLAMP LIFTING ROD	
12	S55157000	1	ｵｻｴｲﾀﾖｳﾒﾀﾙ	BUSH	
13	014760622	2	ｱﾅﾄﾒﾈｼﾞ5.95	SET SCREW, SOCKET SM5.95	
14	S10105001	2	ﾘﾝｸﾓﾄﾞｼﾊﾞﾈ	SPRING, EXTENSION	
15	S49639001	1	ｾﾝｻﾄﾘｯｹﾀﾞｲ	SENSOR SETTING BASE	
16	062680612	1	ﾅﾍﾞｺ4.37-40X6	SCREW, PAN SM4.37-40X6	
17	S49640101	1	ｾﾝｻｶﾝﾁｲﾀ	SENSOR PERCEIVE PLATE	
18	S55479001	1	ｱﾅﾎﾞﾙﾄｻﾞｸﾐ4X8	BOLT, SOCKET (S/P WASHER) M4X8	
19	S49641001	1	ｿﾚﾉｲﾄﾞﾄﾘｯｹｲﾀA	SOLENOID SETTING PLATE, A	
20	060681212	4	ﾊﾞｲﾝﾄﾞ437-40X12	SCREW, BIND SM4.37-40X12	
21	S49642001	1	ｿﾚﾉｲﾄﾞﾄﾘｯｹｲﾀB	SOLENOID SETTING PLATE, B	
22	060501016	2	ﾊﾞｲﾝﾄﾞM5X10	SCREW, BIND M5X10	
23	S49643001	1	ｶﾞｲﾄﾞ	GUIDE	
24	060680712	2	ﾊﾞｲﾝﾄﾞ437-40X7	SCREW, BIND SM4.37-40X7	
25	120448001	1	ｺﾞﾑﾜ	RUBBER BAND	
26	018501422	2	ｱﾅﾎﾞﾙﾄ5X14	BOLT, SOCKET M5X14	
27	150206002	1	ﾋﾗｻﾞｶﾞﾈ16	WASHER, PLAIN 16	
28	048150142	1	ﾄﾒﾜｼﾞｸﾖｳC15	RETAINING RING, EXTERNAL C15	
29	153828001	1	ｺﾛｼﾞｸ	ROLLER SHAFT	
30	107744001	1	ｺﾛ	ROLLER	
31	153484001	1	ｻﾞｶﾞﾈ4.76	WASHER, PLAIN 4.76	
32	105234003	2	ﾅｯﾄ4.37	NUT SM4.37	
33	S41014009	1	ﾚﾊﾞｰﾎﾙﾀﾞｰ	LEVER HOLDER	
34	018061622	2	ｱﾅﾎﾞﾙﾄ6X16	BOLT, SOCKET M6X16	
35	025060232	2	ﾋﾗｻﾞｶﾞﾈﾁｭｳ6	WASHER, PLAIN M 6	
36	S41016001	1	ｵｻｴｱｹﾞﾚﾊﾞｰ	WORK CLAMP LIFTER LEVER	
37	153838001	1	ﾎﾞﾀﾝﾂｶﾐﾚﾊﾞｰｼﾞｸ	B-CLAMP LEVER SHAFT	
38	014760622	1	ｱﾅﾄﾒﾈｼﾞ5.95	SET SCREW, SOCKET SM5.95	
39	017821813	1	ﾎﾞﾙﾄ7.94X18	BOLT, SM7.94X18	

E . 下軸関係 / Lower shaft mechanism

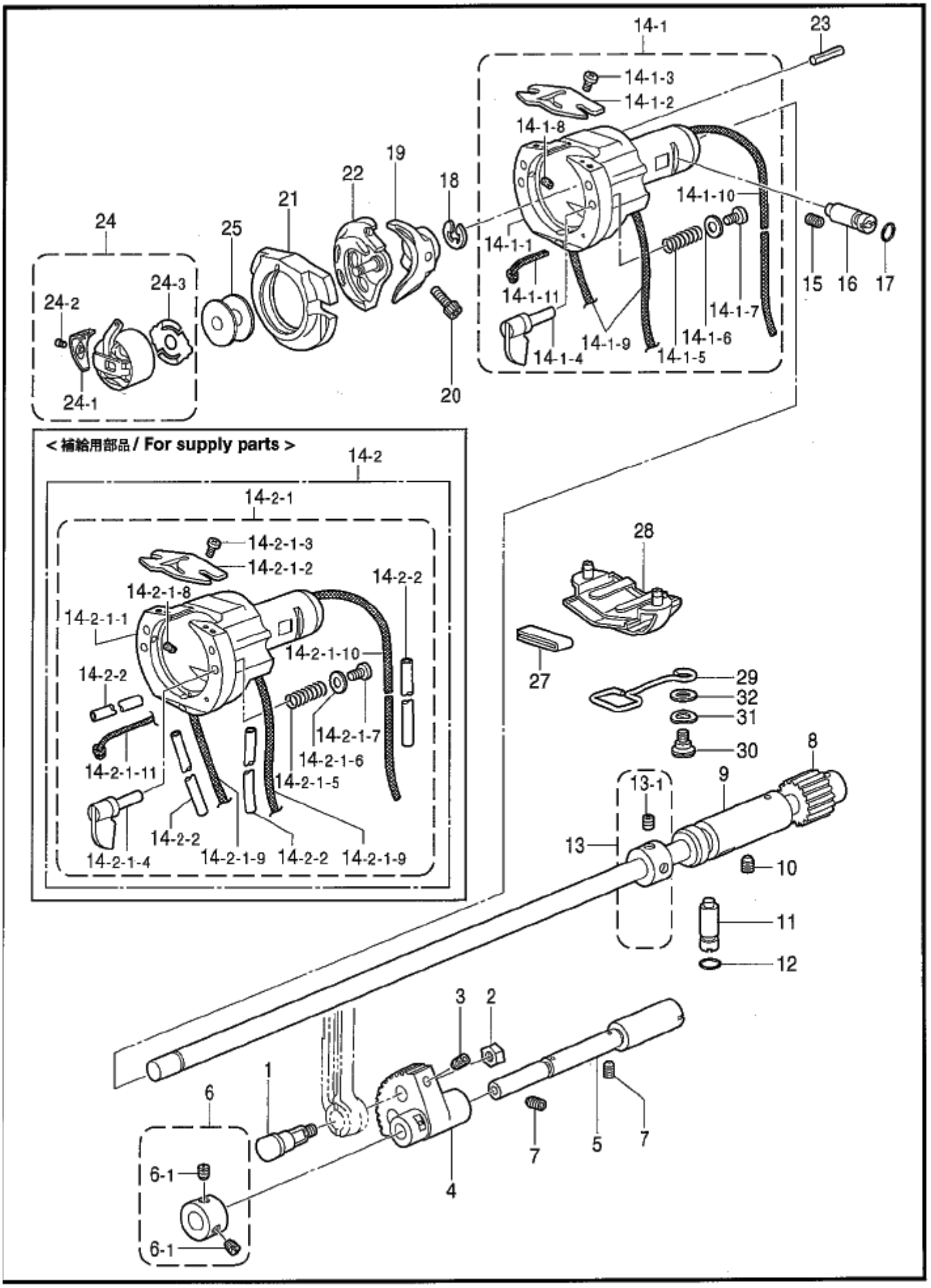

118-V30-305

E．下軸関係 / Lower shaft mechanism

REF.NO	CODE	Q'TY	ヒンメイ	NAME OF PARTS	RM
1	141786001	1	ｸﾗﾝｸﾛｯﾄﾞﾀﾞﾝﾈｼﾞ	SHOULDER SCREW	
2	100090004	1	ﾅｯﾄ7.14	NUT, SM7.14	
3	014680622	1	ｱﾅﾄﾒﾈｼﾞ4.37ｸﾎﾞﾐ	SET SCREW, SOCKET (CP) SM4.37	
4	152245101	1	ﾖｳﾄﾞｳｷﾞﾔ	ROCK GEAR	
5	S37978251	1	ﾖｳﾄﾞｳｷﾞﾔｼﾞｸ	ROCK GEAR SHAFT	
6	181995001	1	ｾｯﾄｶﾗｰｸﾐ	SET SCREW COLLAR ASSY	
6-1	101706001	2	ﾄﾒﾈｼﾞ6.35	SET SCREW, SM6.35-40X5.5	
7	014760622	2	ｱﾅﾄﾒﾈｼﾞ5.95	SET SCREW, SOCKET SM5.95	
8	S49605001	1	ｼﾀｼﾞｸｸﾐ	LOWER SHAFT ASSY	
9	S55213001	1	ｼﾀｼﾞｸﾒﾀﾙ	LOWER SHAFT BUSH	
10	014760622	1	ｱﾅﾄﾒﾈｼﾞ5.95	SET SCREW, SOCKET SM5.95	
11	152678201	1	ｶﾏﾁﾖｳｾｯｼﾞｸ	ADJUSTING STUD	
12	081003670	1	OﾘﾝｸﾞPW3	O-RING, PW3	
13	S49609001	1	ｾｯﾄｶﾗｰｸﾐ	SET SCREW COLLAR ASSY	
13-1	014770622	2	ｱﾅﾄﾒﾈｼﾞ6.35ｸﾎﾞﾐ	SET SCREW, SOCKET (CP) SM6.35	
14-1	S55927101	1	ｵｵｶﾏﾀｲｸﾐ	SHUTTLE RACE BASE ASSY	
14-1-1	S55216101	1	ｵｵｶﾏﾀｲ	SHUTTLE RACE BASE	
14-1-2	S02429101	1	ｶﾏｲﾄｱﾝﾅｲ	SHUTTLE RACE THREAD GUIDE	
14-1-3	062660412	2	ﾅﾍﾞｺ318-40X4	SCREW, PAN SM3.18-40X4	
14-1-4	152683101	2	ｵｵｶﾏﾄﾘﾂｹﾂﾒ	S-RACE BASE SETTING CLAW	
14-1-5	152684101	2	ｵｵｶﾏﾄﾘﾂｹﾊﾞﾈ	SPRING, COMPRESSION	
14-1-6	402887001	2	ｻﾞｶﾞﾈ3.2	WASHER, 3.2	
14-1-7	062660712	2	ﾅﾍﾞｺ318-40X7	SCREW, PAN SM3.18-40X7	
14-1-8	S09043000	2	ﾌｪﾙﾄ	FELT	
14-1-9	S49981000	2	ｸﾐﾋﾓ3X3	WICK, 3X3 L=360	
14-1-10	S49626000	1	ｸﾐﾋﾓ3X3	WICK, 3X3 L=300	
14-1-11	S49685000	1	ｸﾐﾋﾓ3X3	WICK, 3X3 L=100	
15	014760622	1	ｱﾅﾄﾒﾈｼﾞ5.95	SET SCREW, SOCKET SM5.95	
16	152678201	1	ｶﾏﾁﾖｳｾｯｼﾞｸ	ADJUSTING STUD	
17	081003670	1	OﾘﾝｸﾞPW3	O-RING, PW3	
18	048070342	1	ﾄﾒﾜE7	RETAINING RING, E7	
19	S55215001	1	ﾄﾞﾗｲﾊﾞｰHR	DRIVER, HR	
20	018501232	1	ｱﾅﾎﾞﾙﾄ5X12	BOLT, SOCKET M5X12	
21	*	1	ｵｵｶﾏ	SHUTTLE RACE BASE	
22	*	1	ﾅｶｶﾏﾊｺｸﾐ	SHUTTLE HOOK ASSY, W/BOX	
23	S16290001	1	ﾆｰﾄﾞﾙﾛｰﾗｰ4X19.8	NEEDLE ROLLER, 4X19.8	
24	*	1	ﾎﾞﾋﾞﾝｹｰｽｸﾐ	BOBBIN CASE ASSY	
24-1	*	1	ﾎﾞﾋﾞﾝｹｰｽﾁﾖｳｼﾊﾞﾈ	TENSION SPRING	
24-2	*	1	ﾎﾞﾋﾞﾝｹｰｽﾊﾞﾈﾈｼﾞ	SCREW	
24-3	*	1	ｸｳﾃﾝﾎﾞｳｼﾊﾞﾈ	ANTI-SPIN SPRING	
25	*	1	ﾎﾞﾋﾞﾝ	BOBBIN	
27	S55658000	1	ｶﾏﾌｪﾙﾄ	FELT	
28	S55214000	1	ｶﾏﾌｪﾙﾄｻｻｴ	FELT HOLDER	
29	S55140001	1	ｻﾎﾟｰﾄ	SUPPORT	
30	123882001	1	ﾀﾞﾝﾈｼﾞ4.37	SHOULDER SCREW, SM4.37	
31	103810002	1	ﾅﾐｶﾞﾀﾊﾞﾈｻﾞｶﾞﾈ	WAVE WASHER	
32	025770232	1	ﾋﾗｻﾞｶﾞﾈﾁﾕｳ6.35	WASHER, PLAIN M 6.35	
			"補給用部品"	" For Supply parts "	
14-2	S59888001	1	ｵｵｶﾏﾀｲｸﾐｾｯﾄ	SHUTTLE RACE BASE SET	
14-2-1	S59885001	1	ｵｵｶﾏﾀｲｸﾐ	SHUTTLE RACE BASE ASSY	
14-2-1-1	S55216001	1	ｵｵｶﾏﾀｲ	SHUTTLE RACE BASE	
14-2-1-2	S02429101	1	ｶﾏｲﾄｱﾝﾅｲ	SHUTTLE RACE THREAD GUIDE	
14-2-1-3	062660412	2	ﾅﾍﾞｺ318-40X4	SCREW, PAN SM3.18-40X4	
14-2-1-4	152683101	2	ｵｵｶﾏﾄﾘﾂｹﾂﾒ	S-RACE BASE SETTING CLAW	
14-2-1-5	152684101	2	ｵｵｶﾏﾄﾘﾂｹﾊﾞﾈ	SPRING, COMPRESSION	
14-2-1-6	402887001	2	ｻﾞｶﾞﾈ3.2	WASHER, 3.2	
14-2-1-7	062660712	2	ﾅﾍﾞｺ318-40X7	SCREW, PAN SM3.18-40X7	
14-2-1-8	S09043000	2	ﾌｪﾙﾄ	FELT	
14-2-1-9	S59886001	2	ﾌｪﾙﾄ	FELT, L=360	

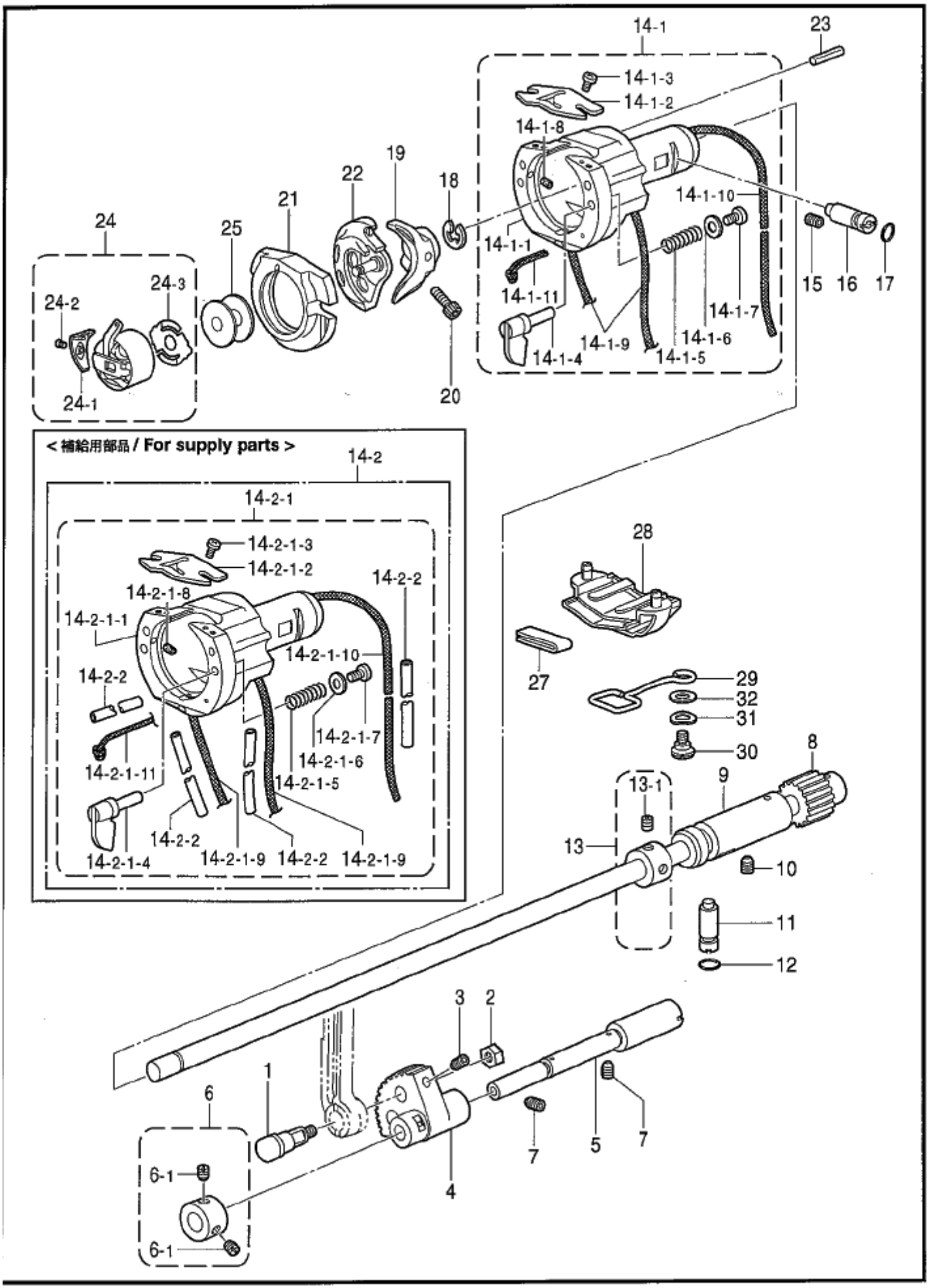
14-1
23
14-1-3
14-1-2
14-1-8
19
22
18
21
14-1-10
24
25
14-1-1
24-3
24-2
14-1-11
15
16
17
14-1-7
14-1-9
14-1-6
14-1-4
14-1-5
24-1
20
< 補給用部品 / For supply parts >
14-2
14-2-1
14-2-1-3
14-2-1-2
14-2-2
14-2-1-8
14-2-1-1
14-2-1-10
14-2-2
14-2-1-7
14-2-1-6
14-2-1-11
14-2-1-5
14-2-2
14-2-1-4
14-2-1-9
14-2-2
14-2-1-9
28
27
29
32
31
30
8
9
13-1
13
10
11
12
3
2
1
6
7
5
7
4
6-1
6-1

118-V30-305

E . 下軸関係 / Lower shaft mechanism

REF.NO	CODE	Q'TY	ヒンメイ	NAME OF PARTS	RM
14-2-1-10	S57965000	1	ｸﾐﾋﾓ3X3	WICK, 3X3 L=515	
14-2-1-11	S59886001	1	ﾌｴﾙﾄ	FELT, L=360	
14-2-2	S50529000	4	ﾋﾞﾆﾙﾁｭｰﾌﾞ	OIL TUBE, L=320	

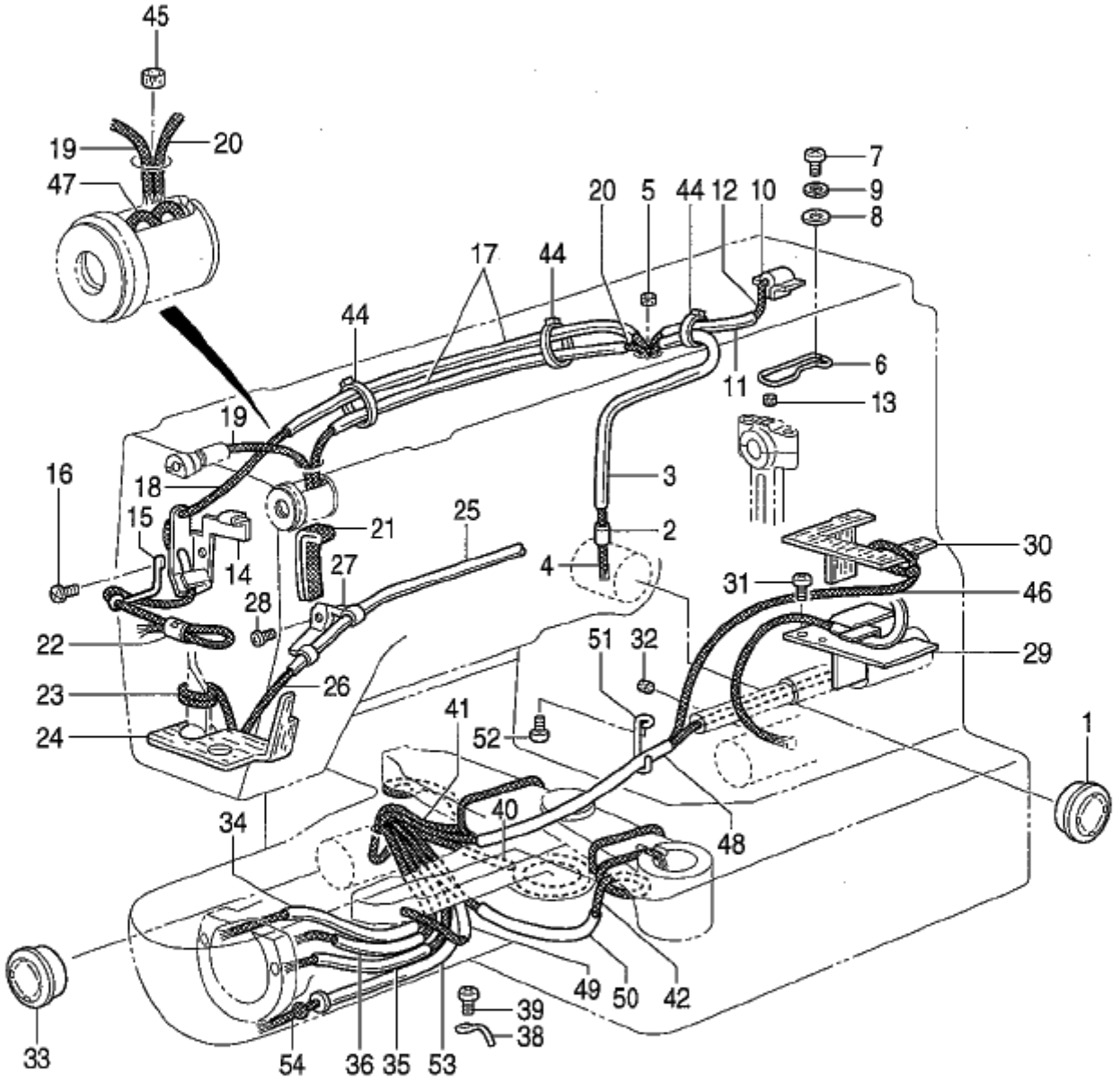
45
19
20
47
7
9
8
20
5
44
12
10
17
44
44
6
11
13
19
16
18
3
15
21
25
2
30
14
27
4
31
46
28
22
51
32
29
23
26
41
52
1
24
40
34
48
49
50
42
39
38
33
54
36
35
53

118-V30-350

F . 給油潤滑関係 / Lubrication

REF.NO	CODE	Q'TY	ヒンメイ	NAME OF PARTS	RM
1	S49992000	1	ｵｲﾙﾎﾟｯﾄﾏﾄﾞ	OIL GAUGE WINDOW	
2	S07333001	1	ｵｲﾙｸﾁﾊﾟｲﾌﾟS	PIPE, S	
3	S07456000	1	ﾋﾞﾆｰﾙﾁｭｰﾌﾞ	OIL TUBE, L=160	
4	148738000	1	ｸﾐﾋﾓ	WICK, L=335	
5	107149001	1	ﾌｪﾙﾄ	FELT	
6	S37983001	1	ｳﾜｼﾞｸｷｭｳｻｻｴ	WICK SUPPORT	
7	062680612	1	ﾅﾍﾞｺ4.37-40X6	SCREW, PAN SM4.37-40X6	
8	025680232	1	ﾋﾗｻﾞｶﾞﾈﾁｭｳ4.37	WASHER, PLAIN M 4.37	
9	028680242	1	ﾊﾞﾈｻﾞｶﾞﾈ2-4.37	WASHER, SPRING 2-4.37	
10	S10478000	1	ﾛｯﾄﾞｷｭｳﾕﾌｪﾙﾄ	FELT	
11	S34986000	1	ﾋﾞﾆﾙﾁｭｰﾌﾞ	OIL TUBE, L=135	
12	S49982000	1	ｸﾐﾋﾓ4X4	WICK, 4X4 L=400	
13	107149001	2	ﾌｪﾙﾄ	FELT	
14	S49959001	1	ﾃﾝﾋﾟﾝｷｭｳｻｻｴ	WICK SUPPORT	
15	S10162201	1	ﾊﾘﾎﾞｳﾋﾓｻｻｴ	WICK SUPPORT	
16	060670512	1	ﾊﾞｲﾝﾄﾞ357-40X5	SCREW, BIND SM3.57-40X5	
17	S49620000	2	ﾋﾞﾆﾙﾁｭｰﾌﾞ	OIL TUBE, L=340	
18	S49957000	1	ｸﾐﾋﾓ4X4	WICK, 4X4 L=700	
19	S49622000	1	ｸﾐﾋﾓ4X4	WICK, 4X4 L=130	
20	S49983000	1	ｸﾐﾋﾓ4X4	WICK, 4X4 L=800	
21	S49984000	1	ﾋﾗｸﾐﾋﾓ	FLAT WICK, L=200	
22	104567101	1	ｸﾐﾋﾓｻｻｴ	WICK SUPPORT	
23	159565000	1	ｸﾐﾋﾓ2.5X150	WICK, L=150	
24	S37985000	1	ｽｲｱｹﾞﾌｪﾙﾄ	FELT	
25	S37986000	1	ﾋﾞﾆﾙﾁｭｰﾌﾞ	OIL TUBE, L=440	
26	S18093100	1	ｸﾐﾋﾓ4X4	WICK, 4X4 L=1100	
27	145547001	1	ﾁｭｰﾌﾞﾎﾙﾀﾞ	TUBE HOLDER	
28	062670512	1	ﾅﾍﾞｺ357-40X5	SCREW, PAN SM3.57-40X5	
29	S37987001	1	ｼﾀｼﾞｸｷｭｳｻｻｴ	LOWER SHAFT WICK SUPPORT	
30	S37988000	1	ｼﾀｼﾞｸｷｭｳﾕﾌｪﾙﾄ	LOWER SHAFT WICK FELT	
31	062680612	1	ﾅﾍﾞｺ4.37-40X6	SCREW, PAN SM4.37-40X6	
32	S09043000	1	ﾌｪﾙﾄ	FELT	
33	152948001	1	ｵｲﾙﾎﾟｯﾄﾏﾄﾞ	OIL GAUGE WINDOW	
34	S49623000	1	ﾋﾞﾆﾙﾁｭｰﾌﾞ	OIL TUBE, L=280	
35	S49624000	1	ﾋﾞﾆﾙﾁｭｰﾌﾞ	OIL TUBE, L=260	
36	S49625000	1	ﾋﾞﾆﾙﾁｭｰﾌﾞ	OIL TUBE, L=160	
38	152969001	2	ｺｰﾄﾞｻｻｴｶﾈ	CORD HOLDER	
39	062670512	2	ﾅﾍﾞｺ357-40X5	SCREW, PAN SM3.57-40X5	
40	148738000	1	ｸﾐﾋﾓ	WICK, L=335	
41	148738000	1	ｸﾐﾋﾓ	WICK, L=335	
42	152956001	1	ｸﾐﾋﾓ4X4	WICK, 4X4 L=500	
44	228475000	3	ｹﾂｿｸﾊﾞﾝﾄﾞ1.9X8	FASTENING BAND, 1.9X80	
45	153924001	1	ﾌｪﾙﾄ	FELT	
46	S49957000	1	ｸﾐﾋﾓ4X4	WICK, 4X4 L=700	
47	S49958000	1	ｸﾐﾋﾓ4X4	WICK, 4X4 L=70	
48	S49985000	1	ﾋﾞﾆﾙﾁｭｰﾌﾞ	OIL TUBE, L=170	
49	S49986000	1	ﾋﾞﾆﾙﾁｭｰﾌﾞ	OIL TUBE, L=110	
50	S49987000	1	ﾋﾞﾆﾙﾁｭｰﾌﾞ	OIL TUBE, L=150	
51	S49995001	1	ｺｰﾄﾞｻｻｴｶﾈ	CORD SUPPORT	
52	062670512	1	ﾅﾍﾞｺ357-40X5	SCREW, PAN SM3.57-40X5	
53	S49618000	1	ﾋﾞﾆｰﾙﾁｭｰﾌﾞ	OIL TUBE, L=210	
54	S55659000	1	ｸﾐﾋﾓ	WICK, L=300	

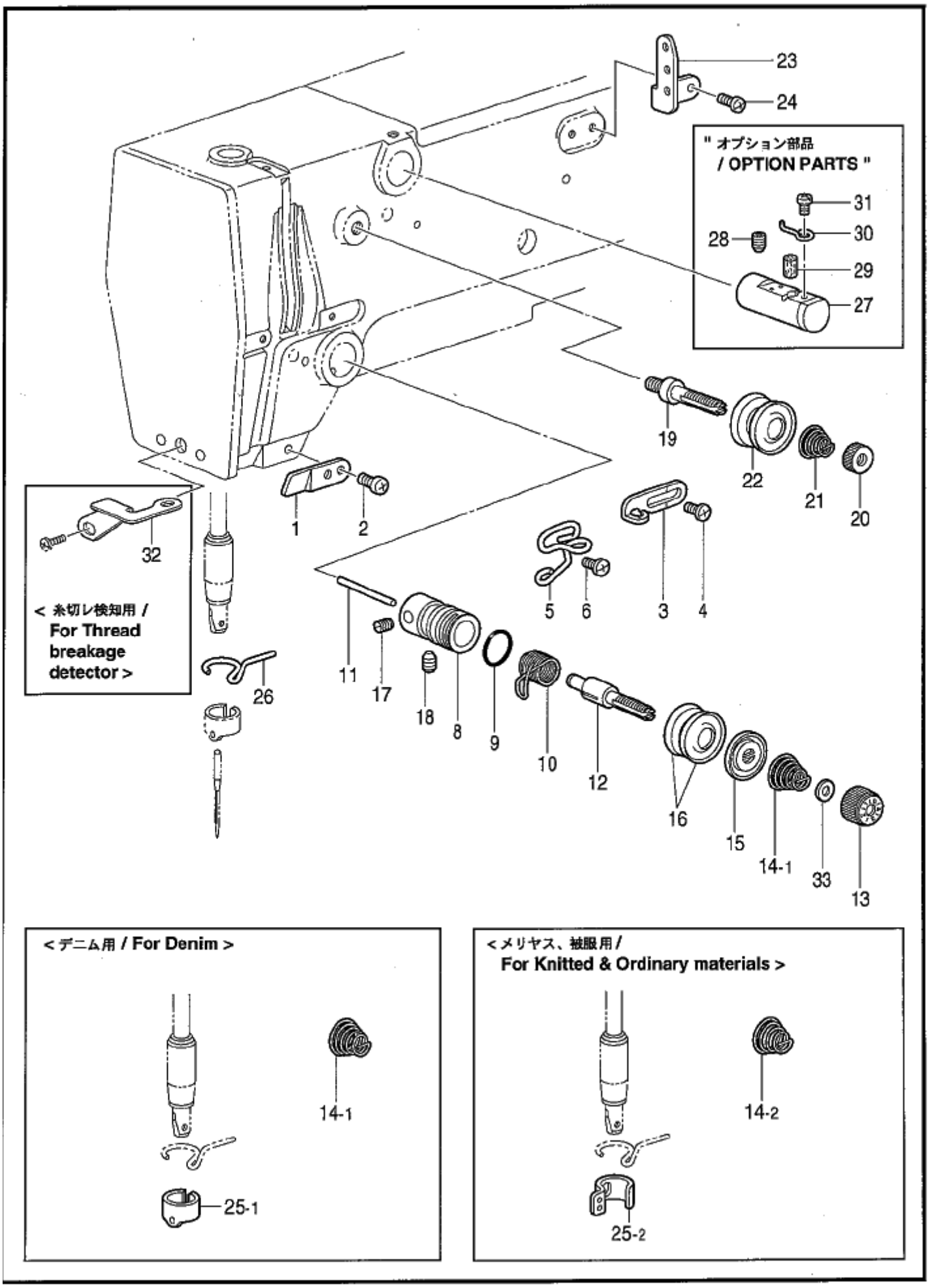
23
24
" オプション部品
/ OPTION PARTS "
31
30
28
29
27
19
22
21
20
1
2
32
< 糸切レ検知用 /
For Thread
breakage
detector >
5
6
3
4
11
17
18
8
9
10
12
26
16
15
14-1
33
13
< デニム用 / For Denim >
14-1
25-1
< メリヤス、被服用 /
For Knitted & Ordinary materials >
14-2
25-2

118-V30-401

G．糸通シ関係 / Threading mechanism

REF.NO	CODE	Q'TY	ヒンメイ	NAME OF PARTS	RM
1	152869001	1	ｱｰﾑｲﾄﾐﾁ	ARM THREAD GUIDE	
2	062670612	1	ﾅﾍﾞｺ357-40X6	SCREW, PAN SM3.57-40X6	
3	S49627001	1	ｱｰﾑｲﾄｶｹ	ARM THREAD GUIDE	
4	060670612	1	ﾊﾞｲﾝﾄﾞ357-40X6	SCREW, BIND SM3.57-40X6	
5	S51859101	1	ｱｰﾑｲﾄｱﾝﾅｲ	ARM THREAD GUIDE	
6	060670612	1	ﾊﾞｲﾝﾄﾞ357-40X6	SCREW, BIND SM3.57-40X6	
8	152872001	1	ｲﾄﾁｮｳｼﾀﾞｲ	TENSION BRACKET	
9	114294001	1	Oﾘﾝｸﾞ	O-RING	
10	*	1	ｲﾄﾄﾘﾊﾞﾈ	THREAD TAKE-UP SPRING	
11	S12699000	1	ｲﾄﾕﾙﾒﾋﾟﾝ	TENSION RELEASE PIN	
12	116922001	1	ｲﾄﾁｮｳｼﾎﾞｳ	TENSION STUD	
13	S31032001	1	ｲﾄﾁｮｳｼﾅｯﾄ	TENSION NUT	
			＜ﾒﾘﾔｽ, 被服用＞	＜For Knitted & Ordinay materials＞	
14-1	104525001	1	ｲﾄﾁｮｳｼﾊﾞﾈ	TENSION SPRING	
			＜ﾃﾞﾆﾑ用＞	＜For Denim＞	
14-2	107606001	1	ｲﾄﾁｮｳｼﾊﾞﾈ	TENSION SPRING, H	
15	159805001	1	ｲﾄﾁｮｳｼｻﾗｵｻｴ	TENSION DISC PRESSER	
16	145446001	2	ｲﾄﾁｮｳｼｻﾗ	TENSION DISC	
17	100402004	1	ﾄﾒﾈｼﾞ3.57	SET SCREW, SM3.57	
18	S10469001	1	ｱﾅﾄﾒﾈｼﾞ5.95	SET SCREW, SOCKET SM5.95	
19	115186001	1	ｼｭｲﾄﾁｮｳｼﾎﾞｳ	MAIN TENSION STUD	
20	100136001	1	ｲﾄﾁｮｳｼﾅｯﾄ	TENSION NUT	
21	115188001	1	ｼｭｲﾄﾁｮｳｼﾊﾞﾈ	MAIN TENSION SPRING	
22	145446001	2	ｲﾄﾁｮｳｼｻﾗ	TENSION DISC	
23	152889001	1	ﾐﾂﾒｲﾄｶｹ	THREAD RETAINER	
24	062670612	2	ﾅﾍﾞｺ357-40X6	SCREW, PAN SM3.57-40X6	
			＜ﾃﾞﾆﾑ用＞	＜For Denim＞	
25-1	152890001	1	ﾊﾘﾎﾞｳｲﾄｱﾝﾅｲA	NEEDLE BAR THREAD GUIDE, A	
			＜ﾒﾘﾔｽ、被服用＞	＜For Knitted & Ordinay materials＞	
25-2	S41222101	1	ﾊﾘﾎﾞｳｲﾄｱﾝﾅｲB	NEEDLE BAR THREAD GUIDE, B	
26	152891101	1	ﾊﾘﾎﾞｳﾒﾀﾙDｲﾄｱﾝﾅ	N-BAR BUSH THREAD GUIDE, D	
33	S12441001	1	ﾁｮｳｼﾊﾞﾈｳｴｻﾞｶﾞﾈ	WASHER	
			″ オプション部品 ″	″ OPTION PATS ″	
27	152881001	1	ｴｷﾚｲﾀｲｸﾐ	NEEDLE COOLER ASSY	
28	014760632	1	ｱﾅｸﾎﾞﾐ595-28X6	SET SCREW, SOCKET (CP)SM5.95X6	
29	152883000	1	ﾌｪﾙﾄ8X15.5	FELT, 8X15.5	
30	152884001	1	ｴｷﾚｲｲﾄｶｹ	NEEDLE COOLER THREAD GUIDE	
31	062670412	1	ﾅﾍﾞｺ357-40X4	SCREW, PAN SM3.57-40X4	
			＜糸切レ検知用＞	＜For Thread breakage detector＞	
32	S45083001	1	ﾒﾝｲﾀｲﾄｱﾝﾅｲ	FACE PLATE THREAD GUIDE	

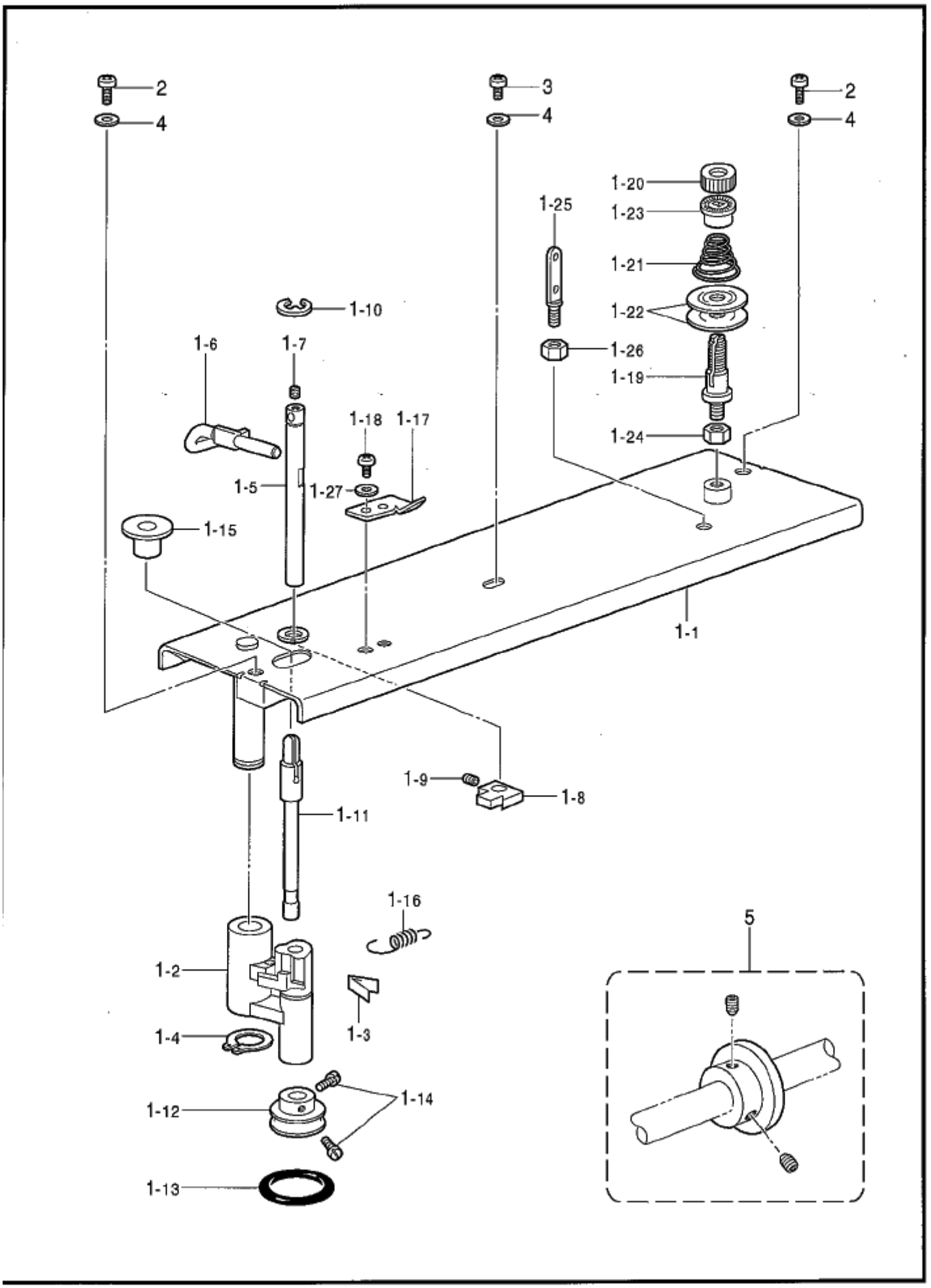
2
4
3
4
2
4
1-20
1-23
1-25
1-21
1-22
1-10
1-26
1-6
1-7
1-19
1-18
1-17
1-24
1-5
1-27
1-15
1-1
1-9
1-8
1-11
1-16
5
1-2
1-3
1-4
1-14
1-12
1-13

118-V30-402

H . 糸巻関係 / Bobbin winder mechanism

REF.NO	CODE	Q'TY	ヒンメイ	NAME OF PARTS	RM
1-1	S37991109	1	ｳﾜﾌﾀ	TOP COVER	
1-2	S37992100	1	ｲﾄﾏｷｳﾃﾞ	BOBBIN WINDER ARM	
1-3	S37993000	1	ｲﾀﾊﾞﾈ	PLATE SPRING	
1-4	048100142	1	ﾄﾒﾜｼﾞｸﾖｳC10	RETAINING RING, EXTERNAL C10	
1-5	S37994001	1	ｲﾄﾏｷﾂﾒｼﾞｸ	BOBBIN WINDER CLAW STUD	
1-6	S37995101	1	ﾎﾞﾋﾞﾝｵｻｴ	BOBBIN PRESSER	
1-7	100402004	1	ﾄﾒﾈｼﾞ3.57	SET SCREW, SM3.57	
1-8	S37996001	1	ｲﾄﾏｷﾂﾒ	BOBBIN WINDER CLAW	
1-9	014680622	1	ｱﾅﾄﾒﾈｼﾞ4.37ｸﾎﾞ	SET SCREW, SOCKET (CP) SM4.37	
1-10	048050342	1	ﾄﾒﾜE5	RETAINING RING, E5	
1-11	S37997001	1	ｲﾄﾏｷｼﾞｸ	BOBBIN WINDER SHAFT	
1-12	154528001	1	ｲﾄﾏｷｸﾙﾏ	BOBBIN WINDER WHEEL	
1-13	120448001	1	ｺﾞﾑﾜ	RUBBER BAND	
1-14	120990001	2	ｱﾀﾏﾂｷﾄﾒﾈｼﾞ4.37	SET SCREW, (CP) SM4.37-40X8	
1-15	S10174000	1	ﾎｺﾘﾖｹｲﾀ	DUST GUARD PLATE	
1-16	S37998001	1	ｲﾄﾏｷｳﾃﾞﾊﾞﾈ	SPRING	
1-17	157968001	1	ﾒｽ	KNIFE	
1-18	062680512	1	ﾅﾍﾞｺ437-40X5	SCREW, PAN SM4.37-40X5	
1-19	159574101	1	ｲﾄﾁｮｳｼﾎﾞｳ	TENSION STUD	
1-20	100136001	1	ｲﾄﾁｮｳｼﾅﾂﾄ	TENSION NUT	
1-21	144110001	1	ｼﾀﾙｰﾊﾞｲﾄﾁｮｳｼﾊﾞ	TENSION ADJUSTING SPRING	
1-22	145446001	2	ｲﾄﾁｮｳｼｻﾗ	TENSION DISC	
1-23	144105000	1	ﾁｮｳｼﾊﾞﾈｳｴｻﾞｶﾞﾈ	TENSION SPRING FLANGE WASHER	
1-24	021680202	1	ﾅﾂﾄ2ｼｭ4.37	NUT, 2 SM4.37	
1-25	141590001	1	ｲﾄﾄｵｼﾎﾞｳ	THREADING BAR, U	
1-26	100022004	2	ﾅﾂﾄ5.95	NUT, SM5.95	
1-27	025680232	1	ﾋﾗｻﾞｶﾞﾈﾁｭｳ4.37	WASHER, PLAIN M 4.37	
2	062681212	2	ﾅﾍﾞｺ437-40X12	SCREW, PAN SM4.37-40X12	
3	062680612	1	ﾅﾍﾞｺ4.37-40X6	SCREW, PAN SM4.37-40X6	
4	025680232	3	ﾋﾗｻﾞｶﾞﾈﾁｭｳ4.37	WASHER, PLAIN M 4.37	
5	S47335101	1	ｲﾄﾏｷﾌﾞｰﾘｸﾐ	BOBBIN WINDER PULLEY ASSY	

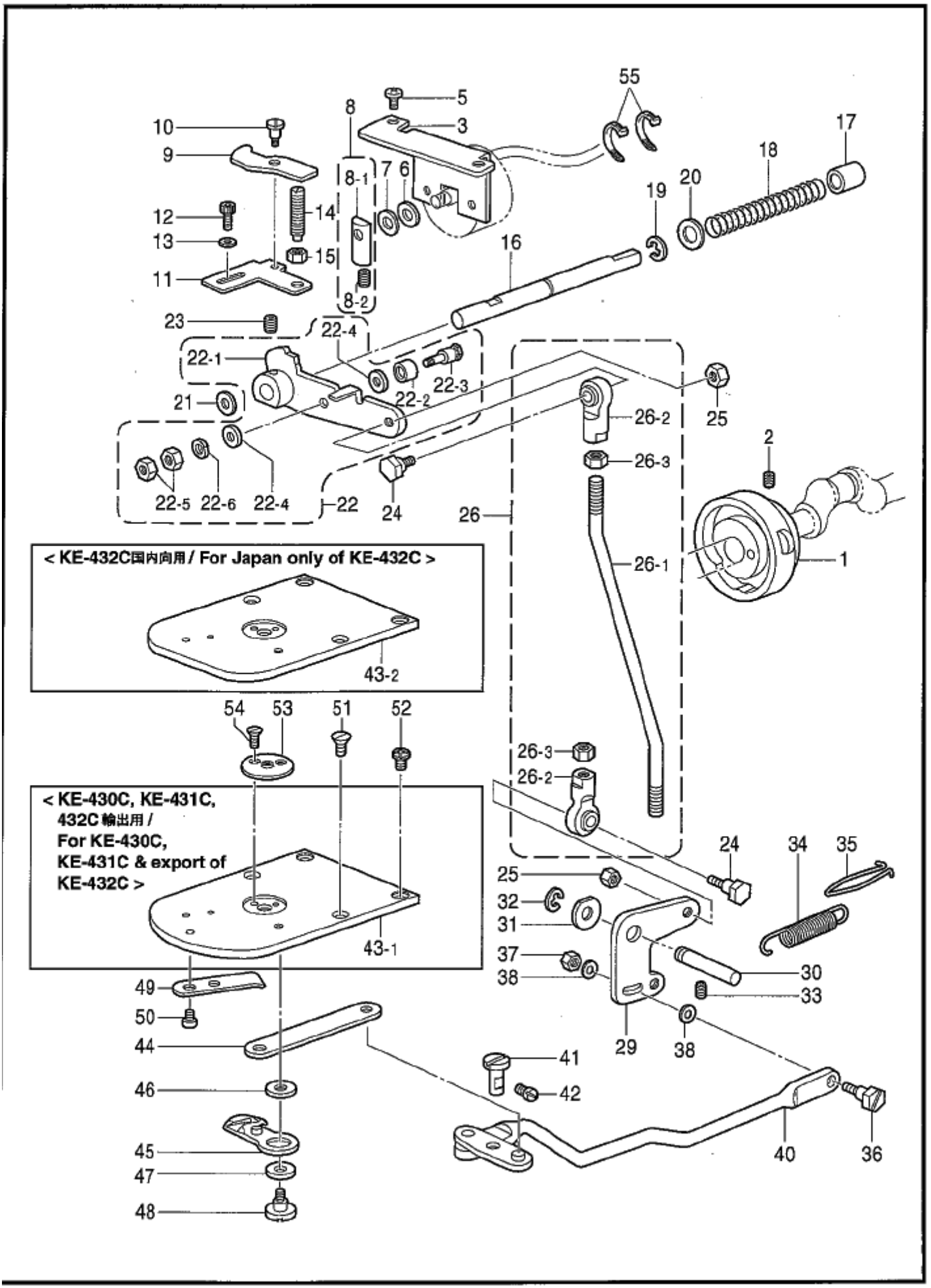
< KE-432C国内向用 / For Japan only of KE-432C >
< KE-430C, KE-431C, 432C輸出用 / For KE-430C, KE-431C & export of KE-432C >
55
5
8
3
10
9
8-1
7
6
17
18
20
19
12
14
13
15
11
16
8-2
23
22-4
22-1
22-3
22-2
21
25
26-2
2
26-3
22-5
22-6
22-4
22
24
26
26-1
1
43-2
54
53
51
52
26-3
26-2
43-1
24
34
35
25
32
31
37
38
30
33
49
50
29
38
44
41
46
42
45
40
36
47
48

118-V30-403

J．糸切り関係 / Thread trimmer mechanism

REF.NO	CODE	Q'TY	ヒンメイ	NAME OF PARTS	RM
1	S49629201	1	ｲﾄｷﾘｶﾑ	THREAD TRIMMER CAM	
2	014770622	2	ｱﾅﾄﾒﾈｼﾞ6.35ｸﾎﾞﾐ	SET SCREW, SOCKET (CP) SM6.35	
3	S38002201	1	ｿﾚﾉｲﾄﾞﾄﾘｯｹｲﾀ	SOLENOID SETTING PLATE	
5	060681212	2	ﾊﾞｲﾝﾄﾞ437-40X12	SCREW, BIND SM4.37-40X12	
6	154599000	1	ｿﾚﾉｲﾄﾞｸｯｼｮﾝ	SOLENOID CUSHION	
7	S02652001	1	ｻﾞｶﾞﾈ	WASHER	
8	S23836001	1	ｿﾚﾉｲﾄﾞﾚﾊﾞｰｸﾐ	SOLENOID LEVER ASSY	
8-1	S02654001	1	ｿﾚﾉｲﾄﾞﾚﾊﾞｰ	SOLENOID LEVER	
8-2	014680622	1	ｱﾅﾄﾒﾈｼﾞ4.37ｸﾎﾞﾐ	SET SCREW, SOCKET (CP) SM4.37	
9	S38003101	1	ｸﾄﾞｳﾚﾊﾞｰｵｼﾚﾊﾞｰ	DRIVING LEVER PUSH LEVER	
10	S49645001	1	ﾀﾞﾝﾈｼﾞ4.76	SHOULDER SCREW, SM4.76	
11	S38004002	1	ｸﾄﾞｳﾚﾊﾞｰｽﾄｯﾊﾟ ＜記号2＞	DRIVING LEVER STOPPER ＜Mraked in 2＞	
11	S38004003	1	ｸﾄﾞｳﾚﾊﾞｰｽﾄｯﾊﾟ ＜記号3＞	DRIVING LEVER STOPPER ＜Mraked in 3＞	
11	S38004004	1	ｸﾄﾞｳﾚﾊﾞｰｽﾄｯﾊﾟ ＜記号4＞	DRIVING LEVER STOPPER ＜Mraked in 4＞	
12	S59893001	2	ｱﾅﾎﾞﾙﾄ437-40X10	BOLT, SOCKET SM4.37-40X10	
13	148847001	2	ｻﾞｶﾞﾈ	WASHER, PLAIN 4.76	
14	159905001	1	ﾄﾒﾇｲﾁｮｳｾﾂﾈｼﾞ	ADJUSTING SCREW	
15	105812003	1	ﾅｯﾄ7.94	NUT, SM7.94	
16	S49644001	1	ｸﾄﾞｳﾚﾊﾞｰｱﾝﾅｲｼﾞｸ	DRIVING LEVER GUIDE SHAFT	
17	231071001	1	ﾒﾀﾙ8X15	BUSH, 8X15	
18	S32235001	1	ﾇﾉｵｻｴﾊﾞﾈ	SPRING, COMPRESSION	
19	048070342	1	ﾄﾒﾜE7	RETAINING RING, E7	
20	153596001	1	ｻﾞｶﾞﾈ	WASHER	
21	154596000	1	ｲﾄｷﾘｶﾑﾚﾊﾞｰｸｯｼｮﾝ	CUSHION	
22	S49646101	1	ｲﾄｷﾘｸﾄﾞｳﾚﾊﾞｰｸﾐ	THREAD DRIVING LEVER ASSY	
22-1	S59874001	1	ｲﾄｷﾘｸﾄﾞｳﾚﾊﾞｰ	THREAD DRIVING LEVER	
22-2	S59872001	1	ｲﾄｷﾘｺﾛ	THREAD TRIMMER ROLLER	
22-3	S59871001	1	ﾀﾞﾝﾈｼﾞ4.37	SHOULDER SCREW, SM4.37	
22-4	S59873001	2	ｻﾞｶﾞﾈ	WASHER, PLAIN	
22-5	SA0049001	2	ﾅｯﾄ4.37	NUT, SM4.37	
22-6	028680242	1	ﾊﾞﾈｻﾞｶﾞﾈ2-4.37	WASHER, SPRING 2-4.37	
23	014770622	1	ｱﾅﾄﾒﾈｼﾞ6.35ｸﾎﾞﾐ	SET SCREW, SOCKET (CP) SM6.35	
24	S02354001	2	ﾀﾏﾂｷﾞﾃﾀﾞﾝﾈｼﾞB	SHOULDER SCREW, B	
25	100022005	2	ﾅｯﾄ5.95	NUT, SM5.95	
26	S49648001	1	ｲﾄｷﾘﾛｯﾄﾞｸﾐ	THREAD TRIMMER ROD ASSY	
26-1	S49649001	1	ｲﾄｷﾘﾛｯﾄﾞ	THREAD TRIMMER ROD	
26-2	141492001	2	ﾀﾏﾂｷﾞﾃｸﾐ	JOINT ASSY	
26-3	100022005	2	ﾅｯﾄ5.95	NUT, SM5.95	
29	S49650001	1	ｲﾄｷﾘﾚﾊﾞｰ	THREAD TRIMMER LEVER	
30	S10195101	1	ｲﾄｷﾘﾚﾊﾞｰｼﾞｸ	THREAD TRIMMER LEVER SHAFT	
31	110367001	1	ｻﾞｶﾞﾈ	WASHER, PLAIN SPECIAL 8	
32	048060342	1	ﾄﾒﾜE6	RETAINING RING, E6	
33	014760622	1	ｱﾅﾄﾒﾈｼﾞ5.95	SET SCREW, SOCKET SM5.95	
34	S38011001	1	ｲﾄｷﾘﾓﾄﾞｼﾊﾞﾈ	SPRING, EXTENSION	
35	S49651001	1	ﾊﾞﾈｶｹ	SPRING HOOK	
36	110233001	1	ﾀﾞﾝﾈｼﾞ4.76	SHOULDER SCREW, SM4.76	
37	110161004	1	ﾅｯﾄ4.76	NUT, SM4.76	
38	S49994001	2	ｻﾞｶﾞﾈ4.76	WASHER, PLAIN 4.76	
40	S38012001	1	ﾚﾝｶﾝﾚﾊﾞｰｸﾐ	CONNECTING ROD LEVER ASSY	
41	S10202201	1	ﾚﾝｶﾝﾚﾊﾞｰｼﾞｸ	LEVER SHAFT	
42	121007001	1	ｱﾀﾏﾂｷﾄﾒﾈｼﾞ4.37	SET SCREW, SM4.37	
			＜KE-430C, 431C用＞	＜For KE-430C & 431C＞	
			＜KE-432C輸出用＞	＜For Export of KE-432C＞	
43-1	S38015001	1	ﾊﾘｲﾀ	NEEDLE PLATE	
			＜KE-432C国内向用＞	＜For Japan only of KE-432C＞	
43-2	S40916001	1	ﾊﾘｲﾀC	----------	
44	S38016001	1	ｲﾄｷﾘﾚﾝｶﾝ	THREAD CONNECTING ROD	
45	S49988001	1	ｲﾄﾞｳﾊﾞNｸﾐ	MOVABLE KNIFE ASSY, N	
46	S10208001	1	ｲﾄﾞｳﾊﾞｶﾝｻﾞ ＜t=0.4＞	MOVABLE KNIFE SPACER ＜t=0.4＞	
46	S10208002	1	ｲﾄﾞｳﾊﾞｶﾝｻﾞ ＜t=0.5＞	MOVABLE KNIFE SPACER ＜t=0.5＞	
46	S10208003	1	ｲﾄﾞｳﾊﾞｶﾝｻﾞ ＜t=0.6＞	MOVABLE KNIFE SPACER ＜t=0.6＞	

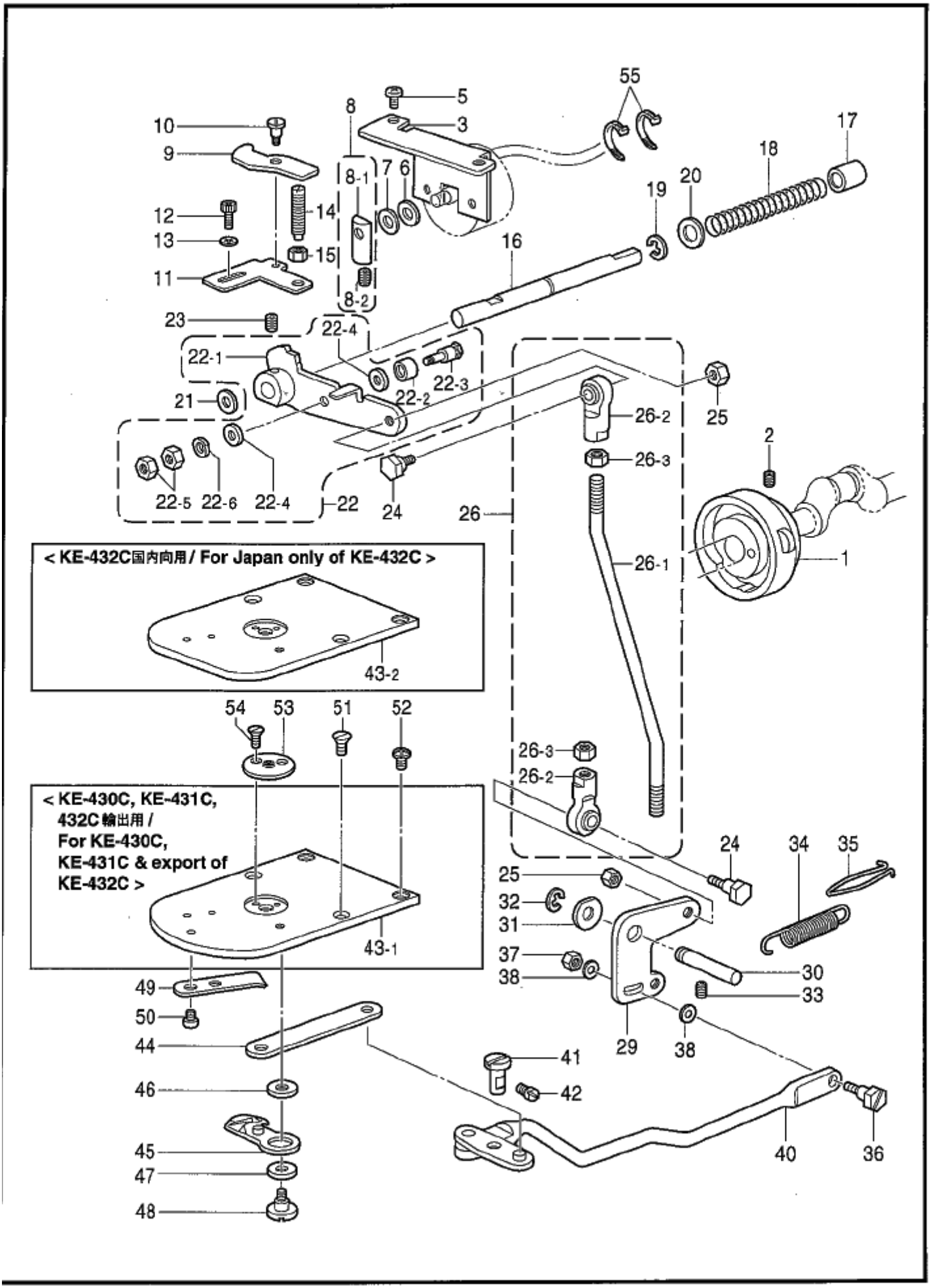
55
5
8
3
10
9
17
18
8-1
7
6
20
19
12
14
13
15
16
11
8-2
23
22-4
22-1
22-3
22-2
21
25
26-2
2
26-3
22-5
22-6
22-4
22
24
26
26-1
1
< KE-432C国内向用 / For Japan only of KE-432C >
43-2
54
53
51
52
26-3
26-2
< KE-430C, KE-431C, 432C輸出用 / For KE-430C, KE-431C & export of KE-432C >
24
34
35
25
32
31
43-1
37
38
30
33
49
50
29
38
44
41
46
42
45
40
36
47
48

118-V30-403

J．糸切り関係 / Thread trimmer mechanism

REF.NO	CODE	Q'TY	ヒンメイ	NAME OF PARTS	RM
47	S00705001	1	ｲﾄﾞｳﾊｶﾗｰ	MOVABLE KNIFE COLLAR	
48	S10209101	1	ｼﾒﾈｼﾞ4.37	SCREW, SM4.37	
49	S10210201	1	ｺﾃｲﾊ	FIXED KNIFE	
50	111140002	2	ｼﾒﾈｼﾞ2.38	SCREW, SM2.38	
51	100032004	2	ｻﾗﾈｼﾞ4.37	SCREW, FLAT SM4.37-40X8	
52	S11244001	2	ｼﾒﾈｼﾞ4.37	SCREW, SM4.37	
53	*	1	ﾊﾘｱﾅｲﾀ	NEEDLE HOLE PLATE	
54	100360003	2	ｻﾗﾈｼﾞ2.38	SCREW, FLAT SM2.38	
55	228475000	2	ｹﾂｿｸﾊﾞﾝﾄﾞ1.9X80	FASTENING BAND, 1.9X80	

K . 糸払イ関係 / Thread wiper mechanism

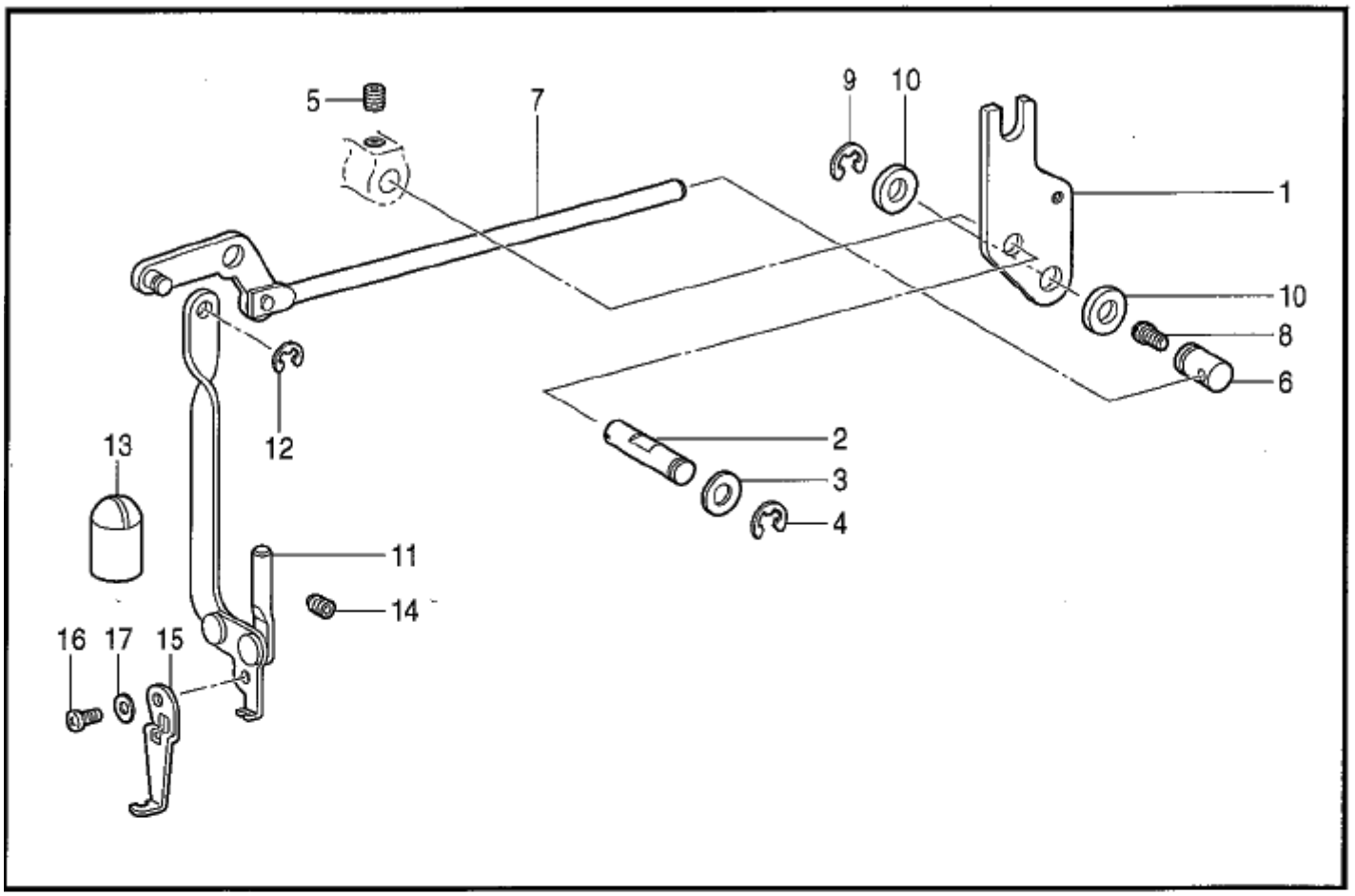

118-V30-405

L . 糸取り関係 / Thread take-up mechanism

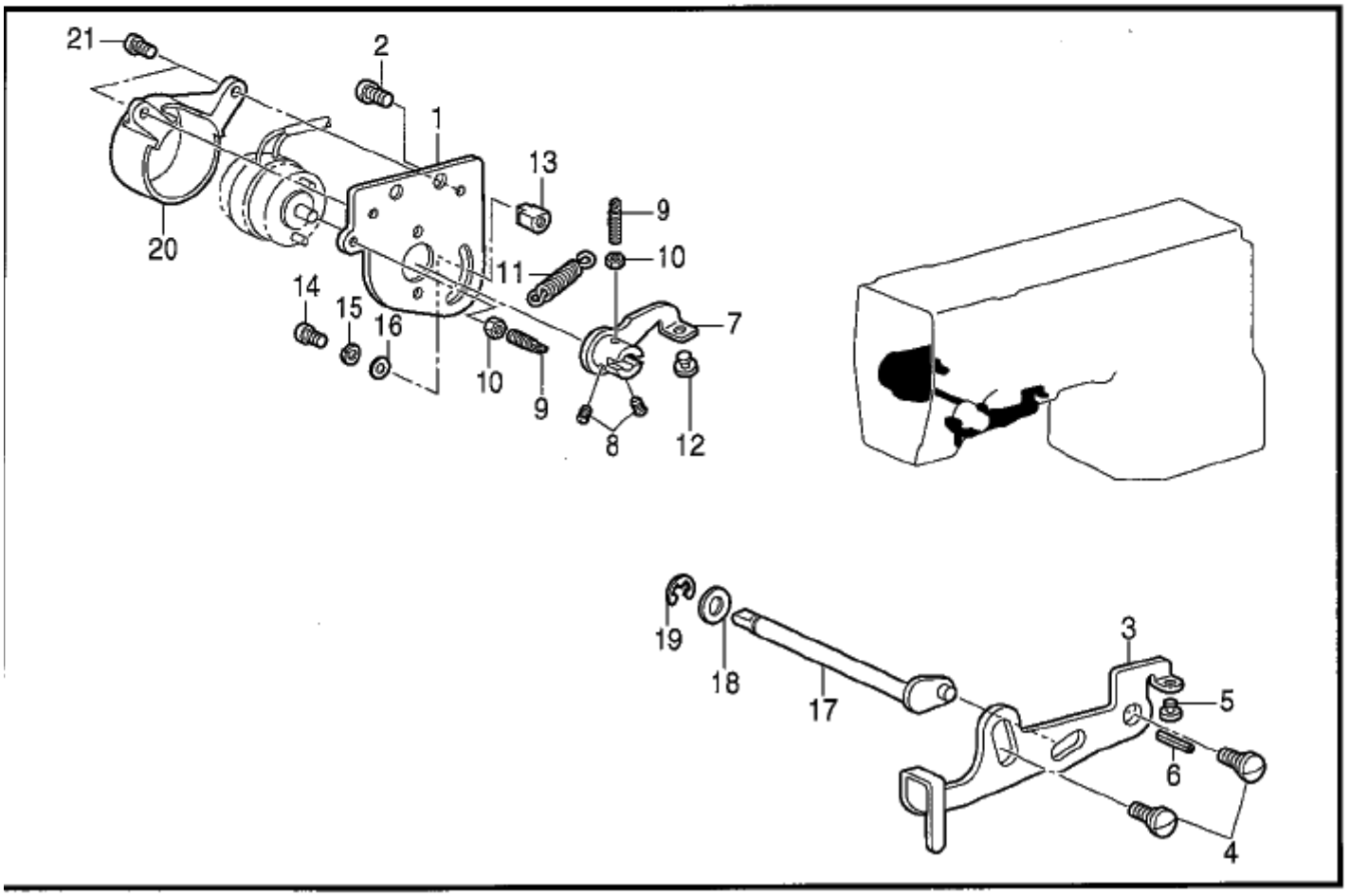

118-V30-408

K . 糸払イ関係 / Thread wiper mechanism

REF.NO	CODE	Q'TY	ヒンメイ	NAME OF PARTS	RM
1	S49652101	1	ﾜｲﾊﾟｰｸﾄﾞｳﾚﾊﾞｰ	THREAD WIPER DRIVING LEVER	
2	152822101	1	ﾜｲﾊﾟｰｼﾞｸ	THREAD WIPER SHAFT	
3	025770232	1	ﾋﾗｻﾞｶﾞﾈﾁｭｳ6.35	WASHER, PLAIN M 6.35	
4	048040342	1	ﾄﾒﾜE4	RETAINING RING, E4	
5	014760622	1	ｱﾅﾄﾒﾈｼﾞ5.95	SET SCREW, SOCKET SM5.95	
6	S38024001	1	ﾜｲﾊﾟｰﾛｯﾄﾞｼﾞｸ	THREAD WIPER ROD SHAFT	
7	S38025001	1	ﾜｲﾊﾟｰﾛｯﾄﾞｸﾐ	THREAD WIPER ROD ASSY	
8	145992001	1	ｱﾀﾏﾂｷﾄﾒﾈｼﾞ4.37	SET SCREW, SM4.37	
9	048060342	1	ﾄﾒﾜE6	RETAINING RING, E6	
10	116629001	2	ｻﾞｶﾞﾈ	WASHER	
			＜KE-430C用＞	＜For KE-430C＞	
11	152823001	1	ﾜｲﾊﾟｰｳﾃﾞｸﾐ	THREAD WIPER ARM ASSY	
			＜KE-431C, 432C用＞	＜For KE-431C & KE-432C＞	
11	S41284301	1	ﾜｲﾊﾟｰｳﾃﾞｸﾐ	THREAD WIPER ARM ASSY	
12	048030342	1	ﾄﾒﾜE3	RETAINING RING, E3	
13	152827001	1	ｵｲﾙｷﾘｾﾝ	OIL CAP	
14	014710522	1	ｱﾅﾄﾒﾈｼﾞ4.76ｸﾎﾞﾐ	SEET SCREW, SOCKET (CP) SM4.76	
15	156206601	1	ﾜｲﾊﾟｰA	THREAD WIPER, A	
16	062670512	2	ﾅﾍﾞｺ3.57-40X5.	SCREW, pan SM3.57X4.5	
17	025350132	2	ﾋﾗｻﾞｶﾞﾈｼｮｳ	WASHER, PLAIN S 3.5	

118-V30-405

L . 糸取リ関係 / Thread take-up mechanism

REF.NO	CODE	Q'TY	ヒンメイ	NAME OF PARTS	RM
1	S49659001	1	ｿﾚﾉｲﾄﾞﾄﾘｯｹｲﾀ	SOLENOID SETTING PLATE	
2	062710812	2	ﾅﾍﾞｺ476-32X8	SCREW, PAN SM4.76-32X8	
3	S49660101	1	ｲﾄﾄﾘﾚﾊﾞｰ	THREAD TAKE-UP LEVER	
4	107321003	2	ﾀﾞﾝﾈｼﾞ4.76	SHOULDER SCREW, SM4.76	
5	S19748001	1	ｻﾄﾞｳｸﾗﾝｸｸｯｼｮﾝ	CUSHION	
6	047401442	1	ｽﾌﾟﾘﾝｸﾞﾋﾟﾝAW4	PIN, SPRING ROLL AW4	
7	S49661101	1	ｿﾚﾉｲﾄﾞﾂｷﾞﾃ	SOLENOID JOINT	
8	S01998001	2	ｱﾀﾏﾂｷﾄﾒﾈｼﾞ3.57	SET SCREW, SM3.57-40X6	
9	110251001	2	ﾇﾉｵｻｴｳﾃﾞﾊﾞﾈｶｹ	SPRING HOOK	
10	021670102	2	ﾅｯﾄ1ｼｭ3.57	NUT, 1 SM3.57	
11	S34883001	1	ｲﾄｷﾘﾊﾞﾈ	SPRING, EXTENSION	
12	S19748001	1	ｻﾄﾞｳｸﾗﾝｸｸｯｼｮﾝ	CUSHION	
13	S49663001	1	ﾅｯﾄ3.57	NUT, SM3.57	
14	062671012	1	ﾅﾍﾞｺ357-40X10	SCREW, PAN SM3.57-40X10	
15	028350242	1	ﾊﾞﾈｻﾞｶﾞﾈ2-3.5	WASHER, SPRING 2-3.5	
16	025350332	1	ﾋﾗｻﾞｶﾞﾈﾀﾞｲ3.5	WASHER, PLAIN L 3.5	
17	S49662001	1	ｲﾄﾄﾘﾚﾊﾞｰｸﾗﾝｸ	TREAD TAKE-UP LEVER CRANK	
18	155559001	1	ﾋﾗｻﾞｶﾞﾈ	WASHER, PLAIN	
19	048040342	1	ﾄﾒﾜE4	RETAINING RING, E4	
20	S49664000	1	ｲﾄﾄﾘｿﾚﾉｲﾄﾞｶﾊﾞｰ	TREAD TAKE-UP SOLENOID COVER	
21	062670612	2	ﾅﾍﾞｺ357-40X6	SCREW, PAN SM3.57-40X6	

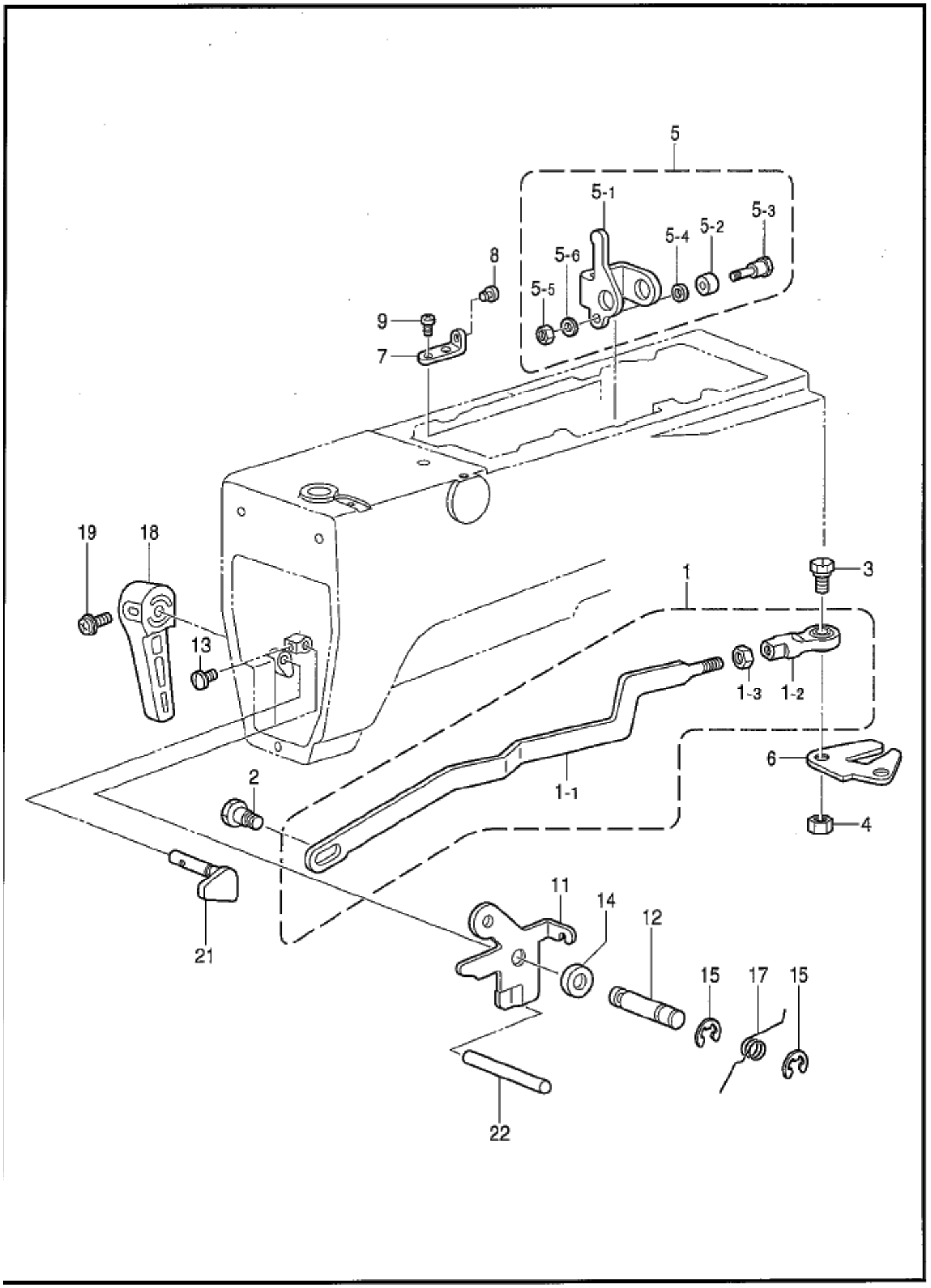

118-V30-406

REF.NO	CODE	Q'TY	ヒンメイ	NAME OF PARTS	RM
1	S49665001	1	ｲﾄﾕﾙﾒﾛｯﾄﾞｸﾐ	TENSION RELEASE ROD ASSY	
1-1	S49666001	1	ｲﾄﾕﾙﾒﾛｯﾄﾞ	TENSION RELEASE ROD	
1-2	141492001	1	ﾀﾏﾂｷﾞﾃｸﾐ	JOINT ASSY	
1-3	100022005	1	ﾅｯﾄ5.95	NUT, SM5.95	
2	145478101	1	ﾀﾞﾝﾈｼﾞ4.76	SHOULDER SCREW, SOCKET SM4.76	
3	S02354001	1	ﾀﾏﾂｷﾞﾃﾀﾞﾝﾈｼﾞB	SHOULDER SCREW, B	
4	100022005	1	ﾅｯﾄ5.95	NUT, SM5.95	
5	S49653001	1	ｲﾄﾕﾙﾒｸﾄﾞｳﾚﾊﾞｰｸ	TR-RELEASE DRIVING LEVER ASSY	
5-1	S49654001	1	ｲﾄﾕﾙﾒｸﾄﾞｳﾚﾊﾞｰ	TENSION RELEASE DRIVING LEVER	
5-2	153597001	1	ｼﾀｲﾄｻﾊﾞｷｶﾗｰ	LOWER THREAD RETAINER COLLAR	
5-3	S30033001	1	ﾀﾞﾝﾈｼﾞ3.57	SHOULDER SCREW, SM3.57	
5-4	S49655001	1	ｶﾗｰ	COLLAR	
5-5	106129002	1	ﾅｯﾄ3.57	NUT, SM3.57	
5-6	028350242	1	ﾊﾞﾈｻﾞｶﾞﾈ2-3.5	WASHER, SPRING 2-3.5	
6	S49656001	1	ｲﾄﾕﾙﾒﾚﾊﾞｰU	TENSION RELEASE LEVER, U	
7	S49657001	1	ﾕﾙﾒﾚﾊﾞｰUｽﾄｯﾊﾟ	RELEAASE LEVER U STOPPER	
8	S19748001	1	ｻﾄﾞｳｸﾗﾝｸｸｯｼｮﾝ	CUSHION	
9	062680812	2	ﾅﾍﾞｺ437-40X8	SCREW, PAN SM4.37-40X8	
11	S38032001	1	ｲﾄﾕﾙﾒﾚﾊﾞｰ	TENSION RELEASE LEVER	
12	S46734001	1	ｵｻｴｱｹﾞﾚﾊﾞｰｼﾞｸ	W-CLAMP LEVER LIFTER SHAFT	
13	S01998001	1	ｱﾀﾏﾂｷﾄﾒﾈｼﾞ3.57	SET SCREW, SM3.57-40X6	
14	S38033001	1	ｶﾗｰ13	COLLAR, 13	
15	048040342	2	ﾄﾒﾜE4	RETAINING RING, E4	
17	SA0703001	1	ｲﾄﾕﾙﾒﾚﾊﾞｰﾊﾞﾈ	TENSION RELEASE LEVER SPRING	
18	S31006001	1	ｵｻｴｱｹﾞﾃｺ	LIFTING LEVER	
19	S39051001	1	ﾅﾍﾞｻﾞｸﾐ35X12	SCREW, PAN (S/P W) M3.5X12	
21	S31952001	1	ｵｻｴｱｹﾞｸﾗﾝｸ	LIFTING CRANK	
22	S10239001	1	ｲﾄﾕﾙﾒﾎﾞｳ	TENSION RELEASE STUD	

N . 針位置検出器関係 / Synchronizer

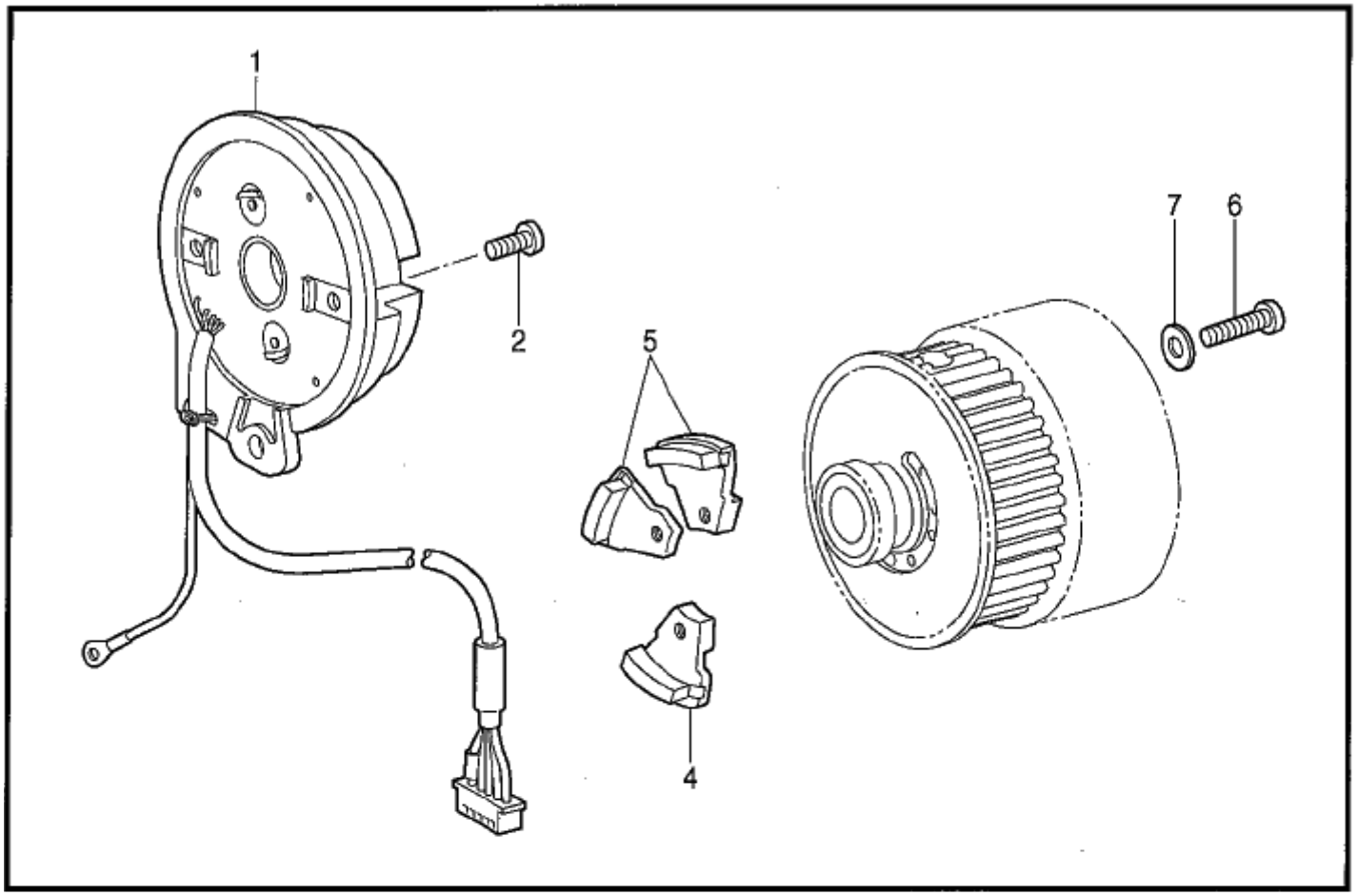

118-V30-501

P . プリント基板関係 / Printed circuit board mechanism

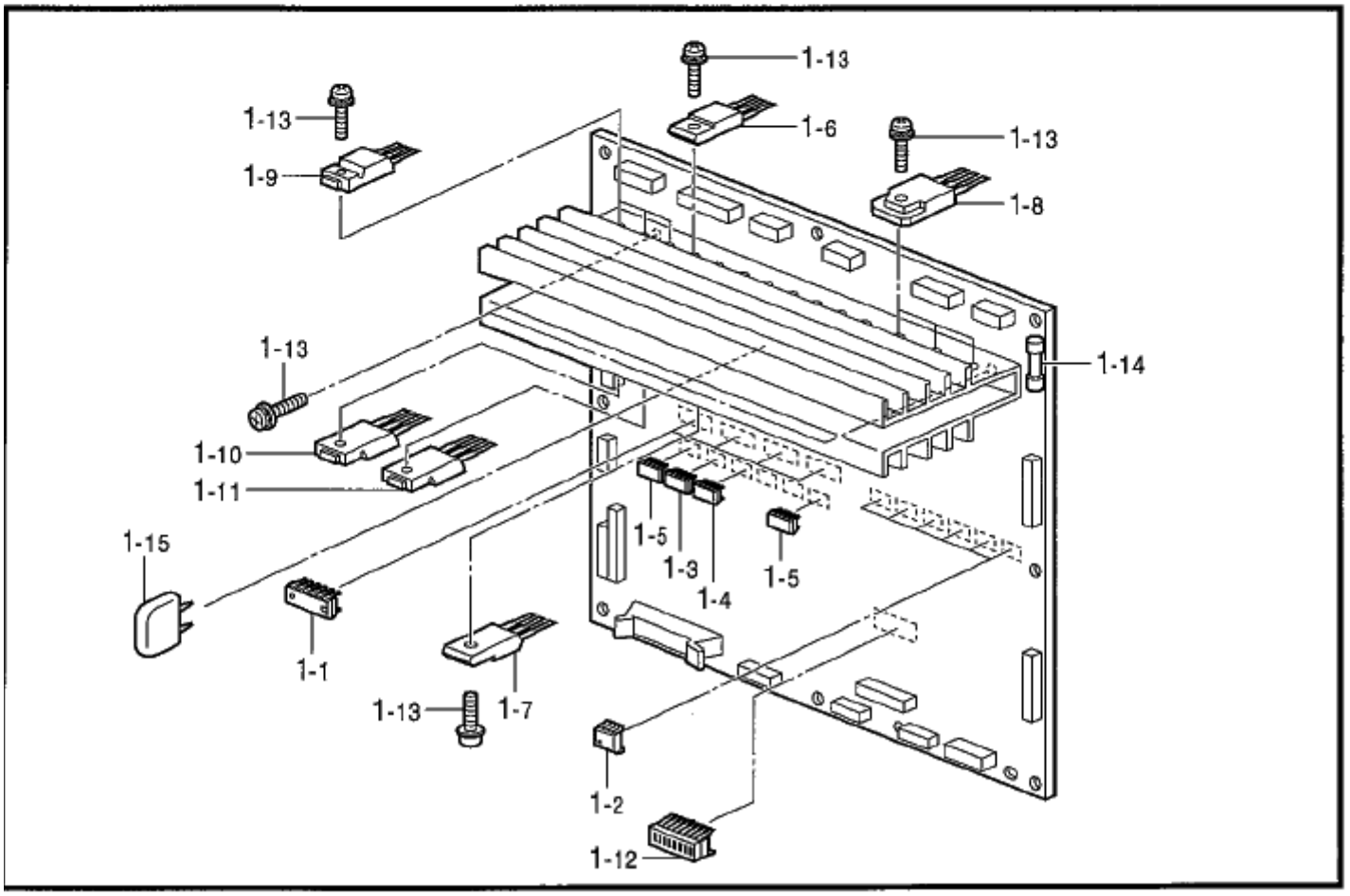

118-V30-518

N . 針位置検出器関係 / Synchronizer

REF.NO	CODE	Q'TY	ヒンメイ	NAME OF PARTS	RM
1	S48666001	1	ｼﾝｸﾛﾅｲｻﾞｸﾐ	SYNCHRONIZER ASSY	
2	062400806	2	ﾅﾍﾞｺ4X8	SCREW, PAN M4X8	
4	S38080001	1	ﾊﾘｼﾀｼﾞｼｬｸｸﾐ	NEEDLE LOWER MAGNET ASSY, D	
5	S38082001	2	ﾊﾘｳｴｼﾞｼｬｸｸﾐ	NEEDLE UPPER MAGNET ASSY, U	
6	062681412	3	ﾅﾍﾞｺ437-40X14	SCREW, PAN SM4.37-40X14	
7	025680132	3	ﾋﾗｻﾞｶﾞﾈｼｮｳ4.37	WASHER, PLAIN S 4.37	

118-V30-501

P . プリント基板関係 / Printed circuit board mechanism

REF.NO	CODE	Q'TY	ヒンメイ	NAME OF PARTS	RM
1	S49479001	1	ﾒｲﾝｷﾊﾞﾝｸﾐ	MAIN PCB ASSY	
1-1	S29019000	4	ICM54640P	IC:M54640P	
1-2	S43178000	6	PHｶﾌﾟﾗPC9231	PHOTO COUPLER:PC9231	
1-3	093650008	1	CMOSIC74HC08F	IC:74HC08F	
1-4	093650032	1	CMOSIC74HC32F	IC:74HC32F	
1-5	091170009	2	BIPIC74LS09F	IC:74LS09F-T	
1-6	S49484000	8	MOSFETFS10KMJ-2	TRANSISTOR, FET:FS10KMJ-2	
1-7	S49485000	8	MOSFETFX6KMJ-2	TRANSISTOR, FET:FX6KMJ-2	
1-8	S49471000	6	MOSFETFK18SM-1	TRANSISTOR, FET:FK18SM-12	
1-9	S38155000	3	MOSFET2SK1306	TRANSISTOR, FET:2SK1306	
1-10	S50645000	1	MOSFET2SK1307	TRANSISTOR, FET:2SK1307	
1-11	S49486000	1	MOSFET2SJ222	TRANSISTOR, FET:2SJ222	
1-12	U32744000	1	DIPSWDSS708	DIP SWITCH:DSS708	
1-13	0A4301005	31	+ﾅﾍﾞｻﾞｸﾐ3X10DA	SCREW, PAN (S/P WASHER) M3X10	
1-14	S48578000	1	GFUSE5AFBﾘｰﾄﾞﾂｷ	GLASS FUSE, 5A W/LEED WIRE	
1-15	Y51030150	1	ﾎﾟﾘC50B103	CAPACITOR, POLYESTER 50B103	

Q1 . コントロールボックス関係 / Control box mechanism

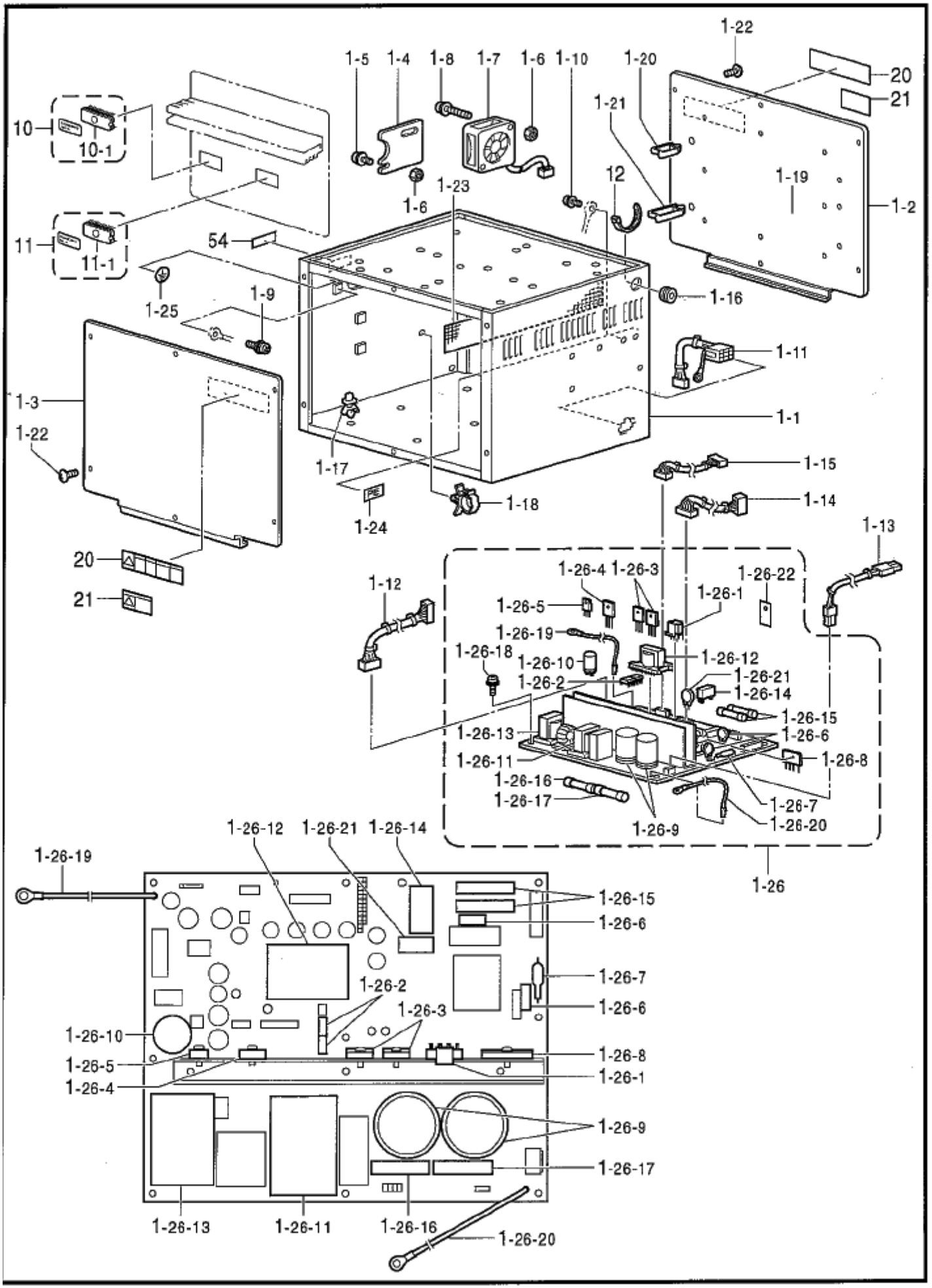

118-V30-502

Q1 . コントロールボックス関係 / Control box mechanism

REF.NO	CODE	Q'TY	ヒンメイ	NAME OF PARTS	RM
1	S49467001	1	ﾎﾞｯｸｽｸﾐ	BOX ASSY	
1-1	S49468001	1	ﾃﾞﾝｹﾞﾝﾎﾞｯｸｽ	POWER SUPPLY BOX	
1-2	S49469001	1	ﾒｲﾝｷﾊﾞﾝﾄﾘﾂｹｲﾀ	MAIN PCB SETTING PLATE	
1-3	S49470001	1	ﾎﾞｯｸｽﾌﾀ	BOX COVER	
1-4	S38093000	1	ｺｰﾄﾞｵｻｴｲﾀ	HOLDER PLATE	
1-5	0A5401206	2	+ﾅﾍﾞｻﾞｸﾐ4X12DB	SCREW, PAN (S/P WASHER) M4X12	
1-6	021400206	2	2ｼｭﾅｯﾄ4	NUT, 2 M4	
1-7	S47692000	1	DCﾌｧﾝﾓｰﾀｸﾐ	FAN MOTOR ASSY, DC	
1-8	0A5403006	2	+ﾅﾍﾞｻﾞｸﾐ4X30DB	SCREW, PAN (S/P WASHER) M4X30	
1-9	0A5400806	1	+ﾅﾍﾞｻﾞｸﾐ4X8DB	SCREW, PAN (S/P WASHER) M4X8	
1-10	0A5401206	2	+ﾅﾍﾞｻﾞｸﾐ4X12DB	SCREW, PAN (S/P WASHER) M4X12	
1-11	S42260000	1	ﾌｯﾄSWｺｰﾄﾞ434ｸﾐ	FOOT SWITCH HARNESS ASSY, 434	
1-12	S38107100	1	ｾｲｷﾞｮﾃﾞﾝｹﾞﾝｺｰﾄ	CONTROL POWER SUPPLY HARNESS	
1-13	S38108000	1	ﾓｰﾀﾃﾞﾝｹﾞﾝｺｰﾄﾞ	MOTOR POWER SUPPLY HARNESS	
1-14	S38109100	1	ｹﾞｰﾄﾃﾞﾝｹﾞﾝｺｰﾄﾞ	H-P POWER SUPPLY HARNESS	
1-15	S38110000	1	PERｺｰﾄﾞ	POWER HARNESS	
1-16	S11949000	1	ｺﾞﾑﾌﾞｯｼｭ	RUBBER BUSH	
1-17	S00554000	17	ｻﾎﾟｰﾄ6NS	SUPPORT, 6NS	
1-18	S31760000	2	CKSｸﾗﾝﾌﾟ26L	CORD CLAMP, 26-L	
1-19	S43275000	6	ｺｰﾄﾞｸﾗﾝﾌﾟWS2NS	CORD CLAMP, WS2NS	
1-20	S43276000	4	ｺｰﾄﾞｸﾗﾝﾌﾟWS3NS	CORD CLAMP, WS3NS	
1-21	S43277000	1	ｺｰﾄﾞｸﾗﾝﾌﾟWS4NS	CORD CLAMP, WS4NS	
1-22	008400604	12	+ﾄﾗｽｺ4X6	SCREW, TRUSS M4X6	
1-23	S38116000	1	ﾎﾞｳｼﾞﾝｱﾐ	FRAGMENT PROTECTOR NET	
1-24	S37059001	1	PEﾏｰｸ	LABEL, PE	
1-25	S37060001	1	ｱｰｽﾏｰｸ	LABEL, GROUNDING	
1-26	S49939101	1	ﾃﾞﾝｹﾞﾝｷﾊﾞﾝｸﾐ	POWER SUPPLY PCB ASSY	
1-26-1	S43177000	1	ICMA3830	IC :MA3830	
1-26-2	S43184000	2	PHｶﾌﾟﾗPC923	PHOTO COUPLER :PC923	
1-26-3	S49586000	2	MOSFET2SK1941	TRANSISTOR, FET :2SK1941	
1-26-4	S38203000	1	SBDYG802C04R	DIODE :YG8022C04R	
1-26-5	SA0037000	2	ﾊﾞﾘｽﾀV14D511	VARISTOR:V14D511	
1-26-6	232384001	1	SｱﾌﾞｿﾊﾞDSA362M	SURGE ABSORBER :DSA362MA	
1-26-7	S49071000	1	DBRD25XB60	DIODE BRIDGE :25XB60	
1-26-8	S38205000	1	ﾃﾞﾝC250B182	CAPACITOR, ALUM-ELEC 250B182	
1-26-9	SA1034000	1	ﾃﾞﾝC63B562	CAPACITOR, ALUM-ELEC 63B562	
1-26-10	S43175000	1	ﾄﾗﾝｽETS54AA159	TRANSFORMER :54AA159	
1-26-11	S43176000	1	ﾄﾗﾝｽETS35AD199	TRANSFORMER :35AD199	
1-26-12	S43181000	1	ｺｲﾙETS49AD289A	COIL :49AD289AC	
1-26-13	S38208000	1	RYJW1AFSNDC5V	RELAY :JW1AFSN/DC 5V	
1-26-14	153242000	2	ﾋｭｰｽﾞ6A	FUSE, 6A	
1-26-15	S08030000	1	Gﾋｭｰｽﾞ5AFB	FUSE, 5A :FB	
1-26-16	S48580000	1	GFUSE7AFB	FUSE, 7A :FB	
1-26-17	0A4301005	8	+ﾅﾍﾞｻﾞｸﾐ3X10DA	SCREW, PAN (S/P WASHER) M3X10	
1-26-18	S43189000	1	PCBE1ｺｰﾄﾞ	PCB E1 HARNESS	
1-26-19	S43187000	1	PCBE2ｺｰﾄﾞ	PCB E2 HARNESS	
1-26-20	S49472000	1	ｻｰﾐｽﾀ6D-22	THERMISTOR :6D-22	
1-26-21	S49938000	1	ｾﾞﾂｴﾝｼｰﾄ	INSULATION SHEET	
10	S49477000	1	PROMｾｲｷﾞｮｸﾐ	PROM CONTROL ASSY	
10-1	UA4817000	1	MOSLSI27C2001	EPROM:27C2001	
11	S53032000	1	PROM-IMｸﾐ	PROM ASSY, IM	
11-1	S38143000	1	CMOSLSI27C512	LSI:27C512	
12	228475000	1	ｹﾂｿｸﾊﾞﾝﾄﾞ1.9X8	FASTENING BAND, 1.9X80	
			＜輸出用＞	＜For Export＞	
20	S38352101	2	ﾃﾞﾝｹﾞｷﾗﾍﾞﾙ.4ｶｺ	LABEL, ELEC. SHOCK 4 LANG.	

RM欄に*が付いている部品をご注文いただきますと、基板等必要な部品が一式入ったセットになっています。
When ordering parts which have an (*) in the RM colum, these parts will be supplied as aset together with other neccssary parts such as sucuit boards.

Q1 . コントロールボックス関係 / Control box mechanism

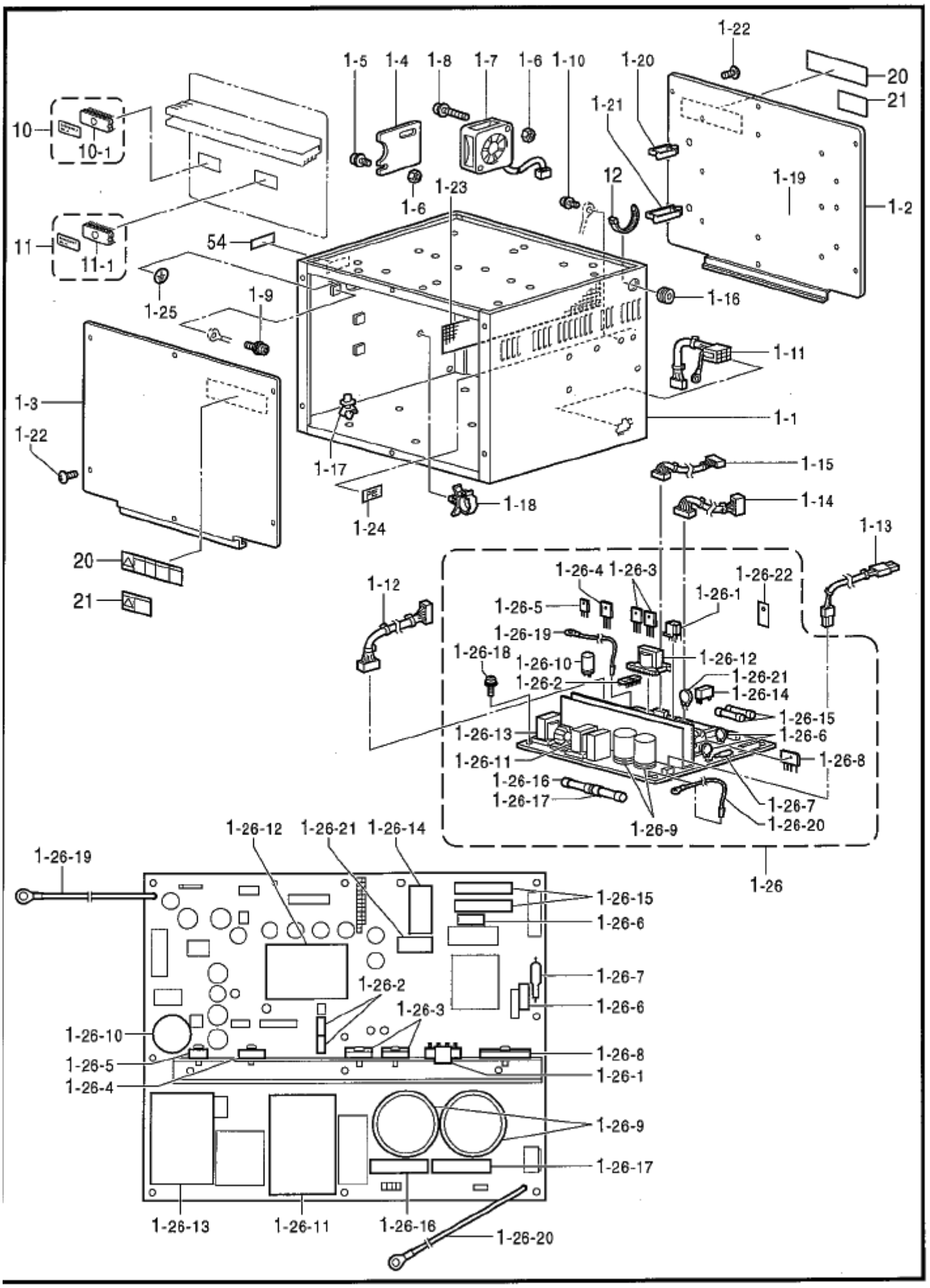

118-V30-502

REF.NO	CODE	Q'TY	ヒンメイ	NAME OF PARTS	RM
			<国内向用>	<For Japap only>	
21	S38353101	2	ﾃﾞﾝｹﾞｷﾗﾍﾞﾙ.ﾜ	----------	
54	S55627001	1	IMﾗﾍﾞﾙ	IM LABEL	
			" 補給用部品 "	" For supply parts "	
			<三相200V、220V用>	<For "3-Phse 200V & 220V AC>	
H-1	S53031001	1	ﾎﾞｯｸｽｿｳｸﾐA1-IM	BOX UNIT, A1-IM :3-P. 200/220V	*
			<単相200V、230V用>	<For "1-Phse 200V & 230V AC>	
H-2	S53033001	1	ﾎﾞｯｸｽｿｳｸﾐA2-IM	BOX UNIT, A2-IM :1-P. 220/230V	*
			<単相100V用>	<For Japan only>	
H-3	S53034001	1	ﾎﾞｯｸｽｿｳｸﾐB1-IM	----------	*
			<単相110V、120V用>	<For "1-Phse 110V & 120V AC>	
H-4	S53035001	1	ﾎﾞｯｸｽｿｳｸﾐB2-IM	BOX UNIT, B2-IM :1-P. 110V AC	*
			<三相415V用>	<For "3-Phse 415V AC>	
H-5	S53036001	1	ﾎﾞｯｸｽｿｳｸﾐC1-IM	BOX UNIT, C1-IM :3-P. 415V AC	*
			<三相380V用>	<For "3-Phse 380V AC>	
H-6	S53037001	1	ﾎﾞｯｸｽｿｳｸﾐC2-IM	BOX UNIT, C2-IM :3-P. 380V AC	*
			<単相240V用>	<For "1-Phse 240V AC>	
H-7	S53038001	1	ﾎﾞｯｸｽｿｳｸﾐC3-IM	BOX UNIT, C3-IM :1-P. 240V AC	*
			<三相400V用>	<For "3-Phse 400V AC>	
H-8	S53039001	1	ﾎﾞｯｸｽｿｳｸﾐE-IM	BOX UNIT, E-IM :3-P. 400V AC	*
			<単相240V用>	<For "1-Phse 240V AC>	
H-9	S53040001	1	ﾎﾞｯｸｽｿｳｸﾐF-IM	BOX UNIT, F-IM :1-P. 230V AC	*

RM欄に*が付いている部品をご注文いただきますと、基板等必要な部品が一式入ったセットになっています。
When ordering parts which have an (*) in the RM colum, these parts will be supplied as aset together with other neccssary parts such as sucuit boards.

< 三相200V,220V用 / For "3-Phase 200V & 220V AC" >

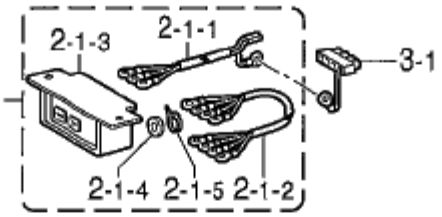

< 単相220V,230V用 / For "1-Phase 220V & 230V AC" >

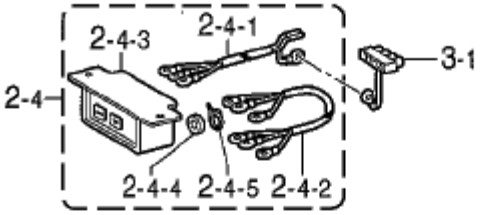

< 単相100V用 / For Japan only >

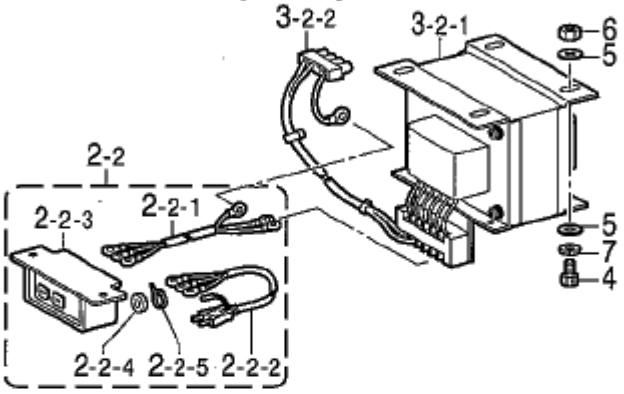

< 単相110V,120V用 / For "1-Phase 110V & 120V AC" >

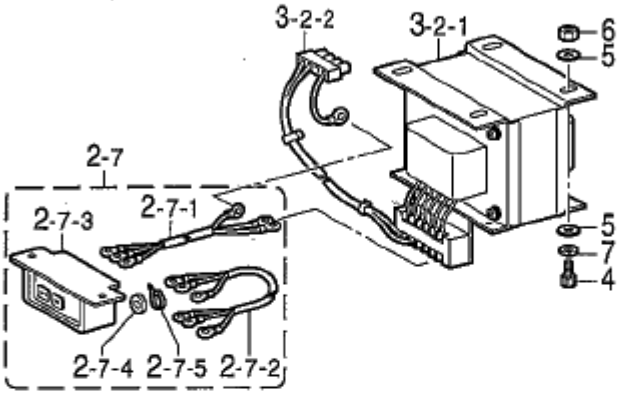

< 三相415V,380V用 / For "3-Phase 415V & 380V AC" >

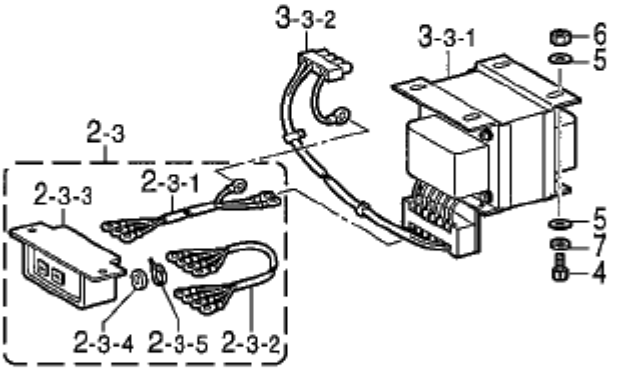

< 単相240V用 / For "1-Phase 240V AC" >

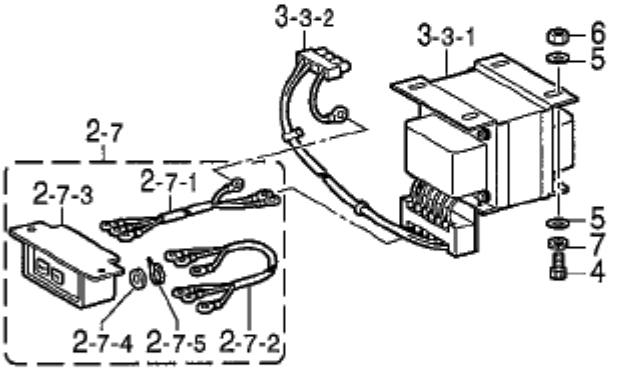

" オプション部品 / OPTION PARTS "

< 三相400V / For "3-Phase 400V AC" >

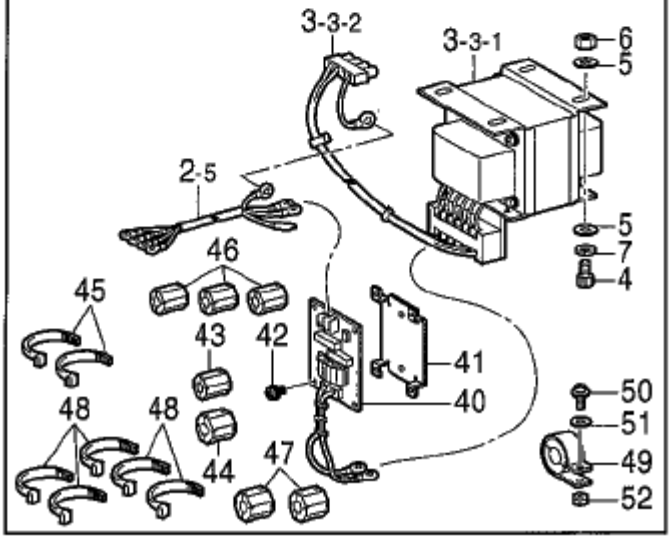

< 単相230V / For "1-Phase 230V AC" >

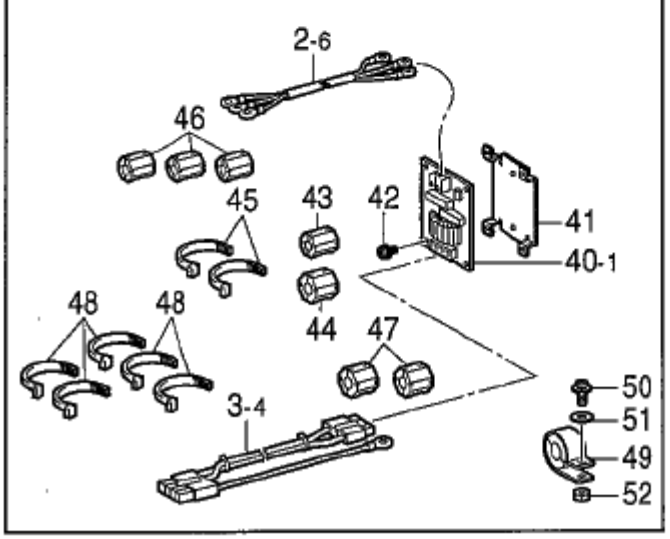

118-V30-502

Q2 . コントロールボックス関係 / Control box mechanism

REF.NO	CODE	Q'TY	ヒンメイ	NAME OF PARTS	RM
			＜三相200V、220V用＞	＜For "3-Phse 200V & 220V AC＞	
2-1	S38112001	1	ﾃﾞﾝｹﾞﾝSWｸﾐA	POWER SUPPLY SWITCH ASSY, A	
2-1-1	S38113000	1	ﾃﾞﾝｹﾞﾝINｺｰﾄﾞA	POWER SUPPLY IN HARNESS, A	
2-1-2	S38133000	1	ﾃﾞﾝｹﾞﾝｺｰﾄﾞ	POWER SUPPLY HARNESS	
2-1-3	J02657001	1	3PｵｼSW#17	3P. PUSH SWITCH, #17	
2-1-4	224514001	2	ｾﾞﾂｴﾝｲﾀ	INSULATION PLATE	
2-1-5	218859001	2	ﾊﾞｲﾝﾀﾞM150	BINDER, M150	
			＜単相100V用＞	＜For Japan only＞	
2-2	S38114000	1	ﾃﾞﾝｹﾞﾝSWｸﾐB	————	
2-2-1	S38115000	1	ﾃﾞﾝｹﾞﾝINｺｰﾄﾞB	————	
2-2-2	S38118000	1	ﾃﾞﾝｹﾞﾝｺｰﾄﾞｺｸﾅｲ	————	
2-2-3	J02657001	1	3PｵｼSW#17	————	
2-2-4	224514001	2	ｾﾞﾂｴﾝｲﾀ	————	
2-2-5	218859001	2	ﾊﾞｲﾝﾀﾞM150	————	
			＜三相415V、380V用＞	＜For "3-Phse 415V & 380V AC＞	
2-3	S38117000	1	ﾃﾞﾝｹﾞﾝSWｸﾐC	POWER SUPPLY SWITCH ASSY, C	
2-3-1	S38115000	1	ﾃﾞﾝｹﾞﾝINｺｰﾄﾞB	POWER SUPPLY IN HARNESS, B	
2-3-2	S38133000	1	ﾃﾞﾝｹﾞﾝｺｰﾄﾞ	POWER SUPPLY HARNESS	
2-3-3	J02657001	1	3PｵｼSW#17	3P. PUSH SWITCH, #17	
2-3-4	224514001	2	ｾﾞﾂｴﾝｲﾀ	INSULATION PLATE	
2-3-5	218859001	2	ﾊﾞｲﾝﾀﾞM150	BINDER, M150	
			＜単相200V、230V用＞	＜For "1-Phse 200V & 230V AC＞	
2-4	S47592000	1	ﾃﾞﾝｹﾞﾝSWｸﾐD	POWER SUPPLY SWITCH ASSY, D	
2-4-1	S38113000	1	ﾃﾞﾝｹﾞﾝINｺｰﾄﾞA	POWER SUPPLY IN HARNESS, A	
2-4-2	S47595000	1	ﾃﾞﾝｹﾞﾝｺｰﾄﾞﾕｼｭﾂ	POWER SUPPLY HARNESS, EXP.	
2-4-3	J02657001	1	3PｵｼSW#17	3P. PUSH SWITCH, #17	
2-4-4	224514001	2	ｾﾞﾂｴﾝｲﾀ	INSULATION PLATE	
2-4-5	218859001	2	ﾊﾞｲﾝﾀﾞM150	BINDER, M150	
			" オプション部品 "	" OPTION PARTS "	
			＜三相400V用＞	＜For "3-Phse 400V AC＞	
2-5	S38120000	1	ﾃﾞﾝｹﾞﾝINｺｰﾄﾞE	POWER SUPPLY IN HARNESS, E	
			＜単相230V用＞	＜For "1-Phse 230V AC＞	
2-6	S43188000	1	ﾃﾞﾝｹﾞﾝINｺｰﾄﾞF	POWER SUPPLY IN HARNESS, F	
			＜単相110V、120V、240V用＞	＜For "1-Phse 110V, 120V & 240V AC＞	
2-7	S47594000	1	ﾃﾞﾝｹﾞﾝSWｸﾐG	POWER SUPPLY SWITCH ASSY, G	
2-7-1	S38115000	1	ﾃﾞﾝｹﾞﾝINｺｰﾄﾞB	POWER SUPPLY IN HARNESS, B	
2-7-2	S47595000	1	ﾃﾞﾝｹﾞﾝｺｰﾄﾞﾕｼｭﾂ	POWER SUPPLY HARNESS, EXP.	
2-7-3	J02657001	1	3PｵｼSW#17	3P. PUSH SWITCH, #17	
2-7-4	224514001	2	ｾﾞﾂｴﾝｲﾀ	INSULATION PLATE	
2-7-5	218859001	2	ﾊﾞｲﾝﾀﾞM150	BINDER, M150	
			＜単相220V、230V 三相200V、220V用＞	＜For "1-Phse 220V & 230V AC 3-Phse 200V & 220V AC＞	
3-1	S38123000	1	ACINｺﾈｸﾀｸﾐ	AC-IN CONNECTOR ASSY	
			＜単相100V、110V、120V用＞	＜For "1-Phse 100V, 110V & 120V AC＞	
3-2	S49473000	1	ﾍﾝｶﾝﾄﾗﾝｽBｸﾐ	CONVERSION TRANSFORMER ASSY, B	
3-2-1	S49474000	1	ﾍﾝｶﾝﾄﾗﾝｽB	CONVERSION TRANSFORMER, B	
3-2-2	S38126000	1	ACINｺｰﾄﾞ	AC-IN HARNESS	

< 三相200V,220V用 / For "3-Phase 200V & 220V AC" >

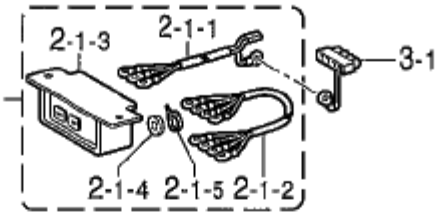

< 単相220V,230V用 / For "1-Phase 220V & 230V AC" >

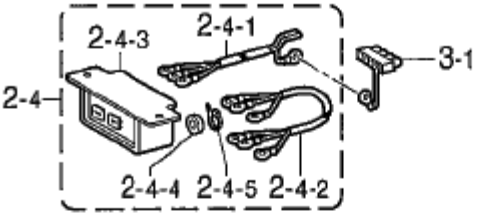

< 単相100V用 / For Japan only >

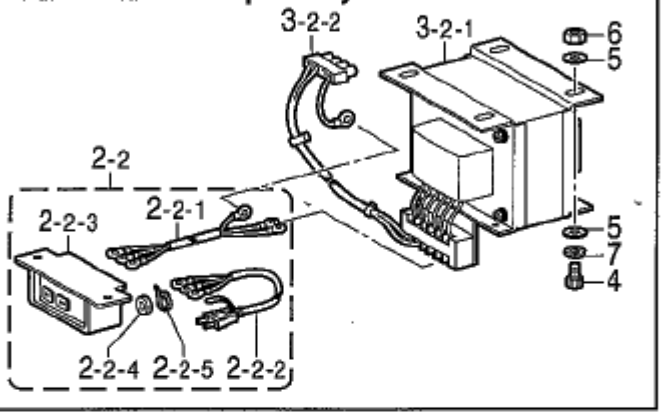

< 単相110V,120V用 / For "1-Phase 110V & 120V AC" >

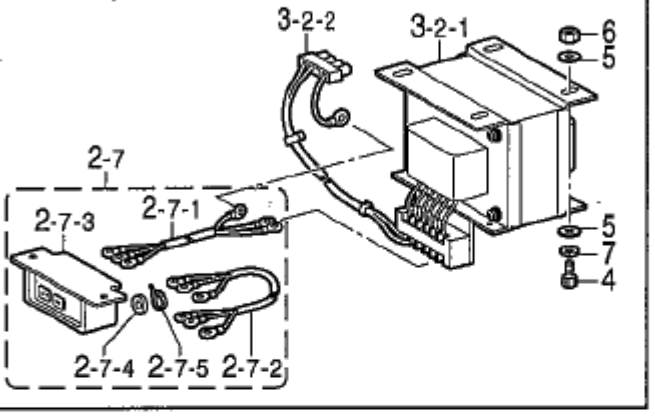

< 三相415V,380V用 / For "3-Phase 415V & 380V AC" >

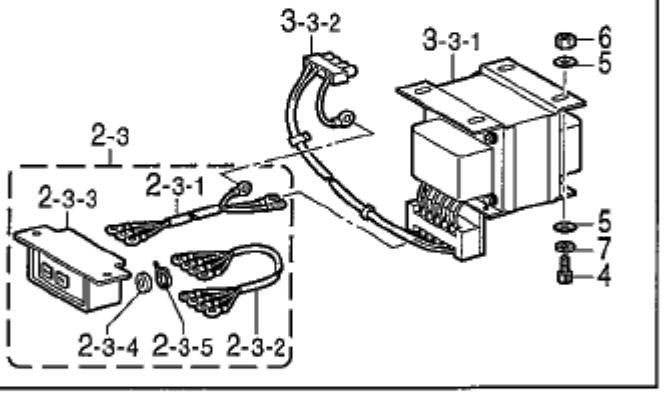

< 単相240V用 / For "1-Phase 240V AC" >

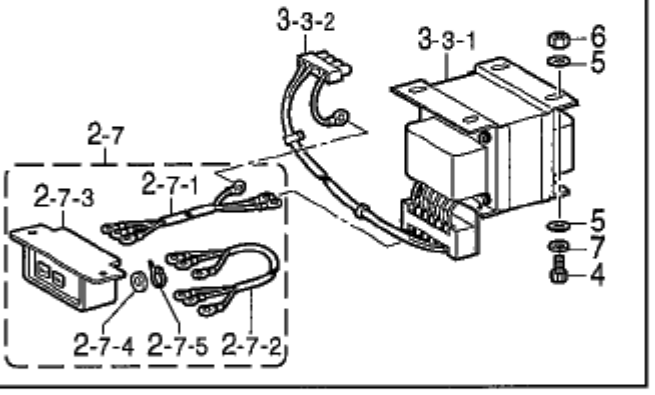

" オプション部品 / OPTION PARTS "

< 三相400V / For "3-Phase 400V AC" >

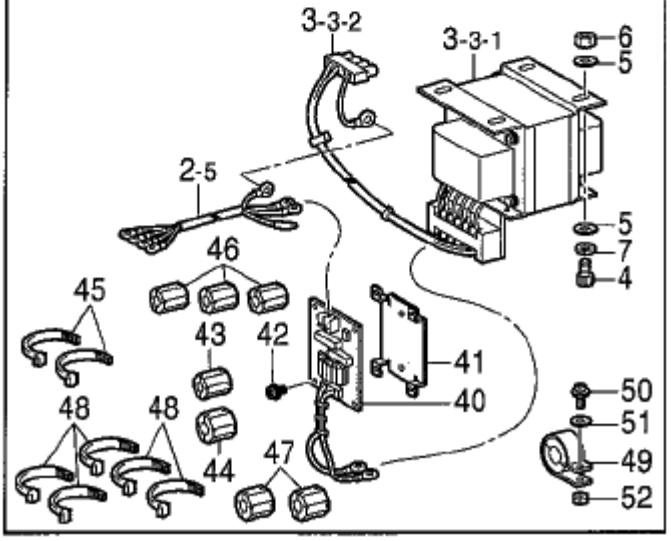

< 単相230V / For "1-Phase 230V AC" >

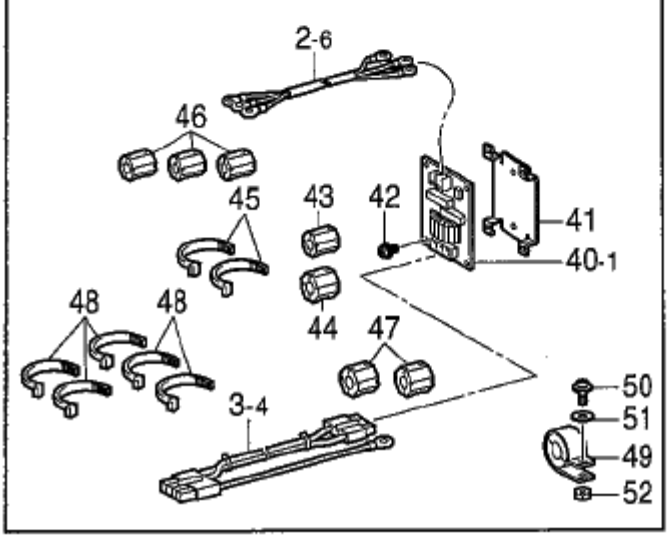

118-V30-502

Q2 . コントロールボックス関係 / Control box mechanism

REF.NO	CODE	Q'TY	ヒンメイ	NAME OF PARTS	RM
			＜単相240V 三相400V、415V、380V用＞	＜For "1-Phse 240V AC 3-Phse 400V, 415V & 380V AC＞	
3-3	S49475000	1	ﾍﾝｶﾝﾄﾗﾝｽCｸﾐ	CONVERSION TRANSFORMER ASSY, C	
3-3-1	S49476000	1	ﾍﾝｶﾝﾄﾗﾝｽC	CONVERSION TRANSFORMER, C	
3-3-2	S38126000	1	ACINｺｰﾄﾞ	AC-IN HARNESS	
			" オプション部品 " ＜単相230V用＞	" OPTION PARTS " ＜For "1-Phse 230V AC＞	
3-4	S43201000	1	ACINｺｰﾄﾞF	AC-IN HARNESS, F	
			＜単相200V, 220V, 230V以外＞	＜Except for "200V, 220V & 230V AC＞	
4	018061436	4	ｱﾅﾎﾙﾄ6X14	BOLT, SOCKET M6X14	
5	025060236	8	ﾋﾗｻﾞｶﾞﾈﾁｭｳ6	WASHER, PLAIN M 6	
6	021060106	4	1ｼｭﾅｯﾄ6	NUT, 1 M6	
7	028060246	4	ﾊﾞﾈｻﾞｶﾞﾈ2-6	WASHER, SPRING 2-6	
			" オプション部品 " ＜三相400V用＞	" OPTION PARTS " ＜For "3-Phse 400V AC＞	
40	S40635001	1	ﾉｲｽﾞﾌｲﾙﾀ430Eｸﾐ	NOISE FILTER ASSY, 430E	
			＜単相230V用＞	＜For "1-Phse 230V AC＞	
40-1	S40616001	1	ﾉｲｽﾞﾌｲﾙﾀEMCｸﾐ	NOISE FILTER ASSY, EMC	
			＜単相230V, 三相400V用＞	＜For "1-Phse 230V AC & 3-Phse 400V AC＞	
41	S40620000	1	ｷﾊﾞﾝﾄﾘｯｹｲﾀ	PCB SETTING PLATE	
42	0A4400605	6	+ﾅﾍﾞｻﾞｸﾐ4X6DA	SCREW, PAN (S/P WASHER) M4X6	
43	S40621000	1	EMIｺｱESD-SR-15	EMI CORE, ESD-SR-15	
44	S40622000	1	EMIｺｱESD-SR-25	EMI CORE, ESD-SR-25	
45	149809000	2	ﾀｲﾗｯﾌﾟL	BEAD BAND, L=200	
46	S40621000	3	EMIｺｱESD-SR-15	EMI CORE, ESD-SR-15	
47	S40622000	2	EMIｺｱESD-SR-25	EMI CORE, ESD-SR-25	
48	149809000	5	ﾀｲﾗｯﾌﾟL	BEAD BAND, L=200	
49	S40623000	1	EMIｺｱTR-40-27	EMI CORE, TR-40-27	
50	0A5401606	1	+ﾅﾍﾞｻﾞｸﾐ4X16DB	SCREW, PAN (S/P WASHER) M4X16	
51	025040236	1	ﾋﾗｻﾞｶﾞﾈﾁｭｳ4	WASHER, PLAIN M 4	
52	021400106	1	ﾅｯﾄ1ｼｭ4	NUT, 1 M4	

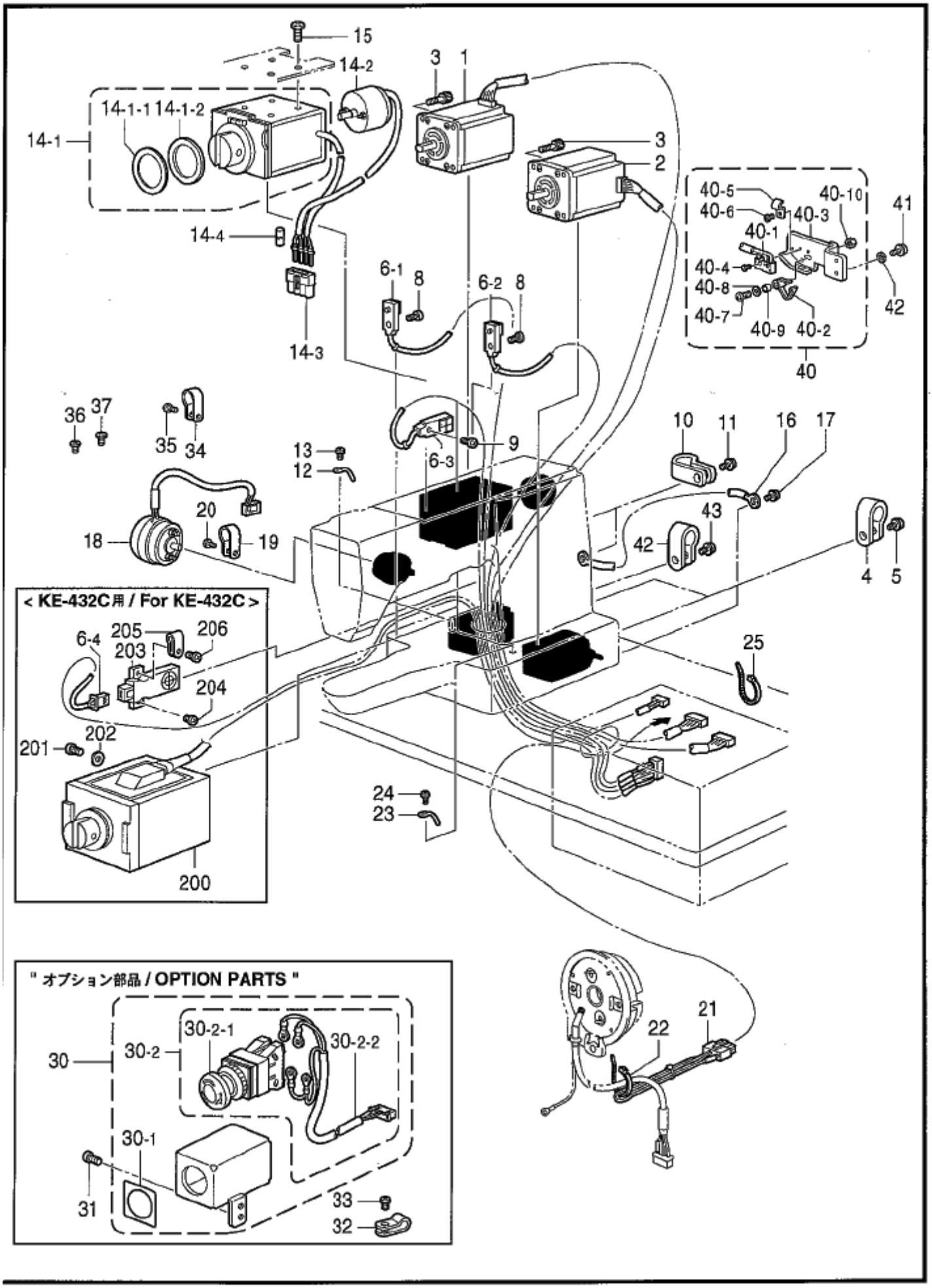
15
14-2
3
1
14-1-1
14-1-2
14-1
3
2
40-5
40-6
40-10
40-3
41
40-1
40-4
40-8
40-7
40-9
40-2
42
40
14-4
6-1
8
6-2
8
14-3
36
37
35
34
13
12
6-3
9
10
11
16
17
20
18
19
43
42
4
5
< KE-432C用 / For KE-432C >
6-4
205
206
203
204
202
201
200
25
24
23
" オプション部品 / OPTION PARTS "
30
30-2
30-2-1
30-2-2
30-1
31
33
32
21
22

118-V30-515

REF.NO	CODE	Q'TY	ヒンメイ	NAME OF PARTS	RM
			＜KE-430C, 431C, 432C用＞	＜For KE-430C, 431C & 432C＞	
1	S38134100	1	ﾊﾟﾙｽﾓｰﾀXｸﾐ	PULSE MOTOR ASSY, X	
2	S38136100	1	ﾊﾟﾙｽﾓｰﾀYｸﾐ	PULSE MOTOR ASSY, Y	
3	018401222	8	ｱﾅﾎﾞﾙﾄ4X12	BOLT, SOCKET M4X12	
4	552907000	2	ｺｰﾄﾞﾎﾙﾀﾞ#10	CORD HOLDER, 10N	
5	0A5401006	2	ﾅﾍﾞｺﾊﾞﾈﾋﾗ4X10	SCREW, PAN (S/P WASHER) M4X10	
			＜KE-430C, 431C用＞	＜For KE-430C & 431C＞	
6	S49463100	1	ﾄｳﾌﾞｾﾝｻｸﾐ	HEAD SENSOR ASSY	
6-1	S56167000	1	ｷﾝｾﾂｾﾝｻGL-N12F	PROXIMITY SENSOR, GL-12NF	
6-2	S56167001	1	ｷﾝｾﾂｾﾝｻGL-N12F	PROXIMITY SENSOR, GL-12NF	
6-3	S56167003	1	ｷﾝｾﾂｾﾝｻGL-N12F	PROXIMITY SENSOR, GL-12NF	
			＜KE-432C用＞	＜For KE-432C＞	
6	S48581100	1	ﾄｳﾌﾞｾﾝｻ432ｸﾐ	HEAD SENSOR ASSY, 432	
6-1	S56167000	1	ｷﾝｾﾂｾﾝｻGL-N12F	PROXIMITY SENSOR, GL-12NF	
6-2	S56167001	1	ｷﾝｾﾂｾﾝｻGL-N12F	PROXIMITY SENSOR, GL-12NF	
6-3	S56167003	1	ｷﾝｾﾂｾﾝｻGL-N12F	PROXIMITY SENSOR, GL-12NF	
6-4	S48582000	1	ｾﾝｻﾊｰﾈｽ	SENSOR HARNESS	
8	062300806	2	ﾅﾍﾞｺ3X8	SCREW, PAN M3X8	
9	062300806	1	ﾅﾍﾞｺ3X8	SCREW, PAN M3X8	
10	552907000	2	ｺｰﾄﾞﾎﾙﾀﾞ#10	CORD HOLDER, 10N	
11	0A5401006	2	ﾅﾍﾞｺﾊﾞﾈﾋﾗ4X10	SCREW, PAN (S/P WASHER) M4X10	
12	152969001	1	ｺｰﾄﾞｻｻｴｶﾈ	CORD HOLDER	
13	062670512	1	ﾅﾍﾞｺ357-40X5	SCREW, PAN SM3.57-40X5	
14-1	S49979400	1	ｵｻｴｿﾚﾉｲﾄﾞｸﾐ	PRESSER SOLENOID ASSY	
14-1-1	S59366000	1	ﾀﾞﾝﾊﾟ1	SHOCK ABSORBER, 1	
14-1-2	S59367000	1	ﾀﾞﾝﾊﾟ2	SHOCK ABSORBER, 2	
14-2	S38144100	1	ｲﾄｷﾘｿﾚﾉｲﾄﾞｸﾐ	THREAD TRIMMER SOLENOID ASSY	
14-3	S38146000	1	ｺﾈｸﾀ3191-04R	CONNECTOR :3191-04R	
14-4	S38147000	1	ﾏｰｸﾁｭｰﾌﾞ5	MARK TUBE, 5	
15	060501016	4	ﾊﾞｲﾝﾄﾞM5X10	SCREW, BIND M5X10	
16	S38148000	1	ｱｰｽｾﾝ1	GROUND WIRE, 1	
17	0A5400806	1	+ﾅﾍﾞｻﾞｸﾐ4X8DB	SCREW, PAN (S/P WASHER) M4X8	
18	S49464000	1	ｲﾄﾄﾘｿﾚﾉｲﾄﾞｸﾐ	THREAD TAKE-UP SOLENOID ASSY	
19	S00480000	3	ｺｰﾄﾞﾎﾙﾀﾞ#5	CORD HOLDER, 5N	
20	060670612	3	ﾊﾞｲﾝﾄﾞ357-40X6	SCREW, BIND SM3.57-40X6	
			＜KE-430C用＞	＜For KE-430C＞	
21	S49465009	1	ｼｮｳｷﾘｶｴｺﾈｸﾀｸﾐ	CONNECTOR ASSY, 430C	
			＜KE-431C用＞	＜For KE-431C＞	
21	S49465001	1	ｼｮｳｷﾘｶｴｺﾈｸﾀｸﾐ	CONNECTOR ASSY, 431E	
			＜KE-432C用＞	＜For KE-432C＞	
21	S49465002	1	ｼｮｳｷﾘｶｴｺﾈｸﾀｸﾐ	CONNECTOR ASSY, 432E	
22	228475000	1	ｹﾂｿｸﾊﾞﾝﾄﾞ1.9X8	FASTENING BAND, 1.9X80	
23	117150001	1	ｺｰﾄﾞｻｻｴｶﾈ	CORD HOLDER	
24	062670612	1	ﾅﾍﾞｺ357-40X6	SCREW, PAN SM3.57-40X6	
25	218859001	1	ﾊﾞｲﾝﾀﾞM150	BINDER, M150	
34	S00480000	2	ｺｰﾄﾞﾎﾙﾀﾞ#5	CORD HOLDER, 5N	
35	060670612	2	ﾊﾞｲﾝﾄﾞ357-40X6	SCREW, BIND SM3.57-40X6	
36	060670612	1	ﾊﾞｲﾝﾄﾞ357-40X6	SCREW, BIND SM3.57-40X6	
37	060400616	1	ﾊﾞｲﾝﾄﾞM4X6	SCREW, BIND M4X6	
			″ オプション部品 ″	″ OPTION PARTS ″	
30	S49934009	1	EMﾛｯｸSWｸﾐ	EM-LOCK SWITCH ASSY	
30-1	S37057001	1	EMｽｲｯﾁｽﾍﾟｰｻ3	EM-SWITCH SPACER, 3	
30-2	S49482000	1	EMﾛｯｸSWﾊｰﾈｽｸﾐ	EM-LOCK SWITCH & HARNESS ASSY	
30-2-1	S32335100	1	SW-AVS311N	SWITCH :AVS311N	

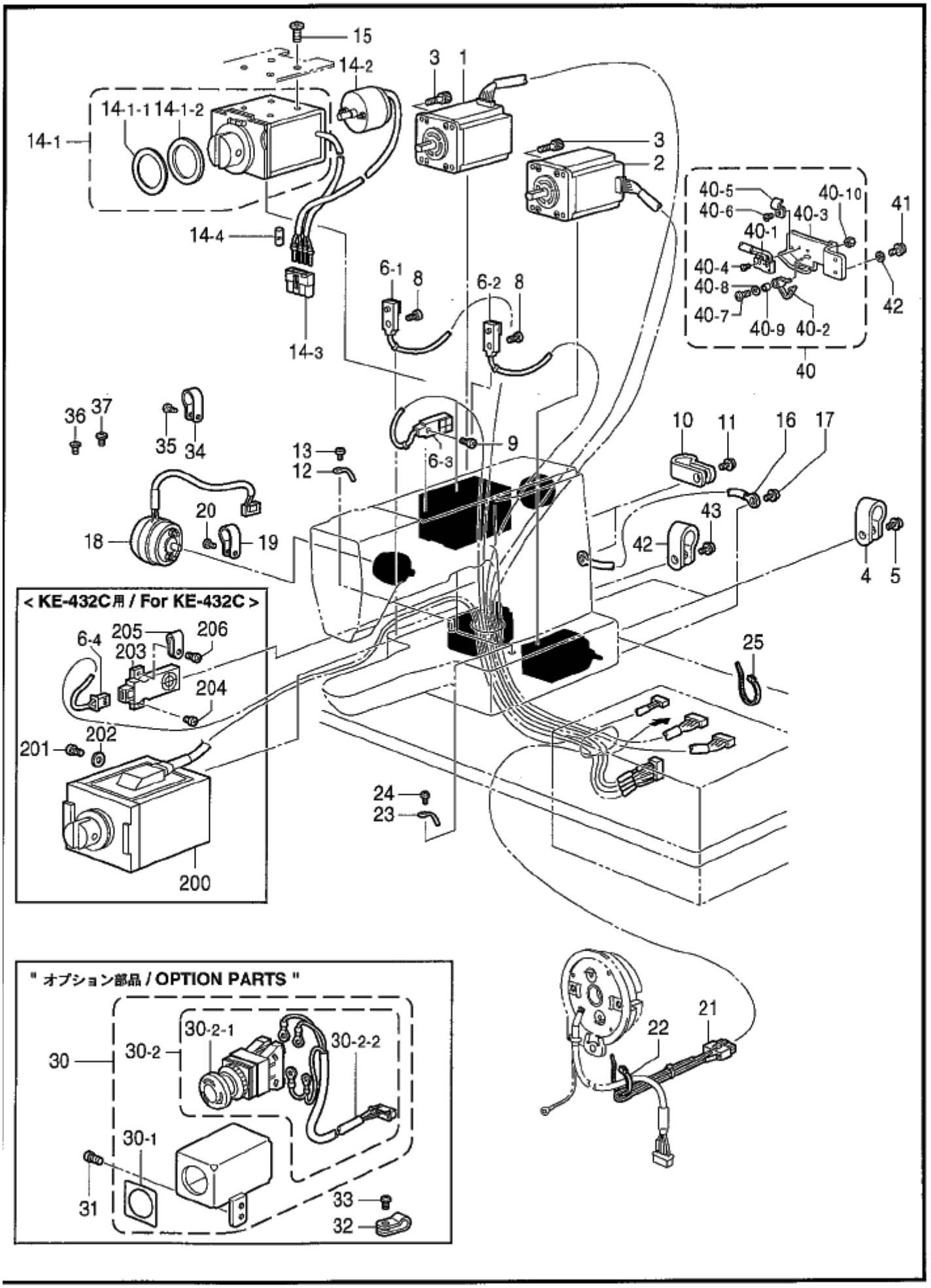
15
14-2
3
1
14-1-1
14-1-2
14-1
3
2
40-5
40-10
40-6
40-3
41
40-1
14-4
40-4
6-1
8
6-2
8
40-8
42
40-7
40-9
40-2
14-3
40
36
37
35
34
13
12
6-3
9
10
11
16
17
20
43
18
19
42
4
5
< KE-432C用 / For KE-432C >
6-4
205
206
203
204
25
202
201
24
23
200
" オプション部品 / OPTION PARTS "
21
22
30-2-1
30-2-2
30
30-2
30-1
31
33
32

118-V30-515

REF.NO	CODE	Q'TY	ヒンメイ	NAME OF PARTS	RM
			″オプション部品″	″ OPTION PARTS ″	
30-2-2	S49466000	1	EMSWﾊｰﾈｽ	EM-SWITCH HARNESS	
31	062710812	2	ﾅﾍﾞｺ476-32X8	SCREW, PAN SM4.76-32X8	
32	149287000	3	ﾅｲﾛﾝｸﾗﾝﾌﾟ	CORD HOLDER, 7N	
33	060670612	3	ﾊﾞｲﾝﾄﾞ357-40X6	SCREW, BIND SM3.57-40X6	
40	S55629101	1	ﾄｳﾌﾞｽｲｯﾁｸﾐ	HEAD SEITCH ASSY	
40-1	S55630001	1	ﾏｲｸﾛｽｲｯﾁｸﾐ	MICRO SWITCH ASSY	
40-2	S38744101	1	ｽｲｯﾁﾌﾟﾚｰﾄﾊﾞﾈ	SWITCH PLATE SPRING	
40-3	S55632001	1	ｽｲｯﾁﾀﾞｲ	SWITCH BRACKET	
40-4	062020806	2	ﾅﾍﾞｺ2X8	SCREW, PAN M2X8	
40-5	140647101	1	ｺｰﾄﾞｵｻｴ	CORD HOLDER	
40-6	062400616	1	ﾅﾍﾞｺM4X6	SCREW, PAN M4X6	
40-7	062401216	1	ﾅﾍﾞｺM4X12	SCREW, PAN M4X12	
40-8	026040236	1	ﾋﾗｻﾞｶﾞﾈﾐｶﾞｷ4	WASHER, PLAIN 4	
40-9	154514001	1	ｽﾍﾟｰｻｰ	SPACER	
40-10	021400106	1	ﾅｯﾄ1ｼｭ4	NUT, 1 M4	
41	0A5401006	2	ﾅﾍﾞｺﾊﾞﾈﾋﾗ4X10	SCREW, PAN (S/P WASHER) M4X10	
42	552907000	1	ｺｰﾄﾞﾎﾙﾀﾞ#10	CORD HOLDER, 10N	
43	0A5401006	1	ﾅﾍﾞｺﾊﾞﾈﾋﾗ4X10	SCREW, PAN (S/P WASHER) M4X10	
			＜KE-432C用＞	＜For KE-432C＞	
200	S48583001	1	ｵｻｴｶｲﾍｲｿﾚﾉｲﾄﾞｸﾐ	SOLENOID ASSY	
201	062501212	4	ﾅﾍﾞｺ5X12	SCREW, PAN M5X12	
202	025050232	4	ﾋﾗｻﾞｶﾞﾈﾁｭｳ5	WASHER, PLAIN M 5	
203	S36048000	1	ｷﾝｾﾂｾﾝｻE2R	PROXIMITY SENSOR, E2R	
204	062300612	1	ﾅﾍﾞｺ3X6	SCREW, PAN M3X6	
205	S10243000	1	ﾅｲﾛﾝｸﾗﾝﾌﾟNK-3N	CORD HOLDER, NK-3N	
206	062300812	1	ﾅﾍﾞｺ3X8	SCREW, PAN M3X8	

S . 操作パネル関係 / Operation panel mechanism

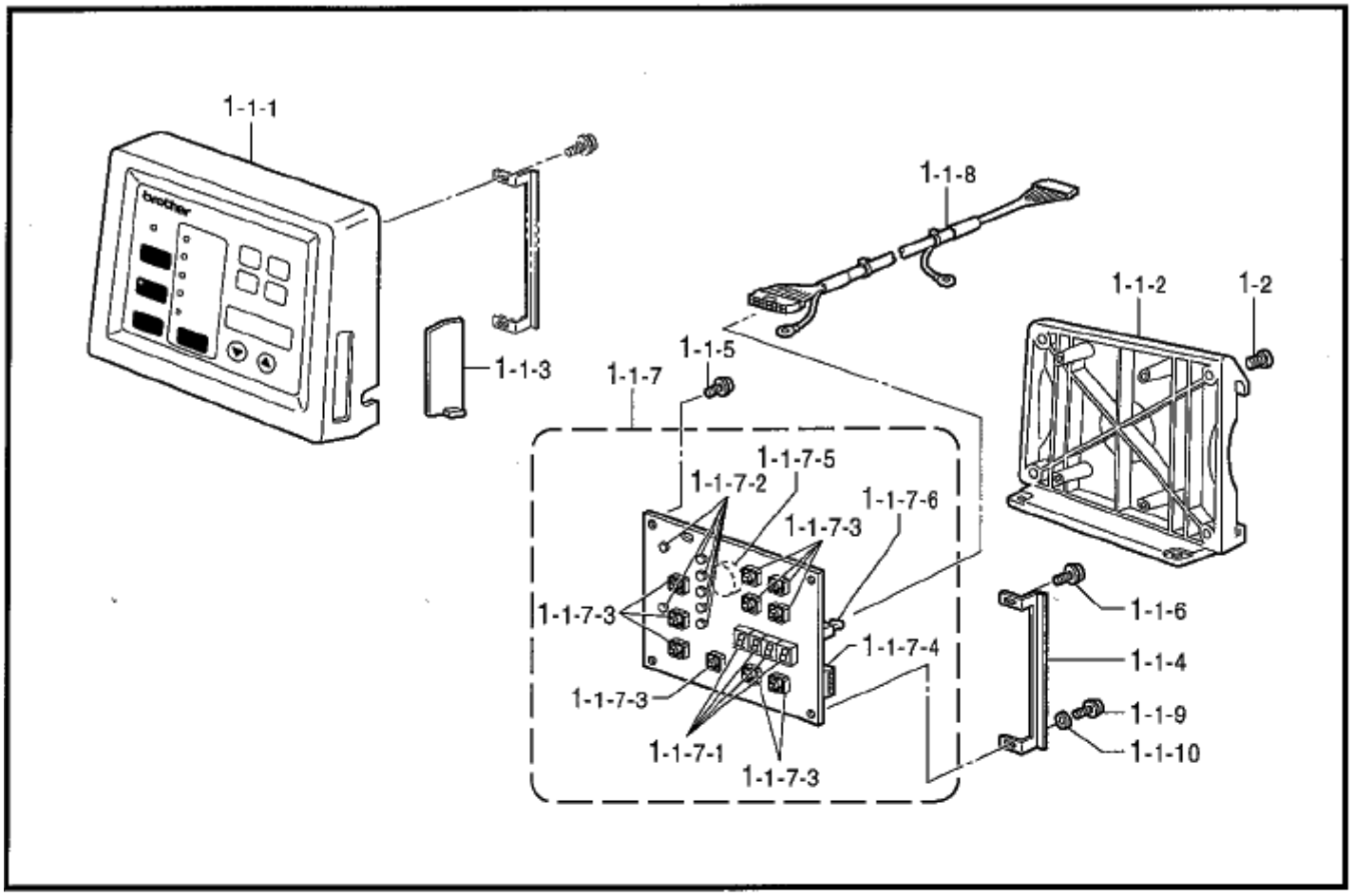

118-V30-530

T . 動力台関係 / Power table

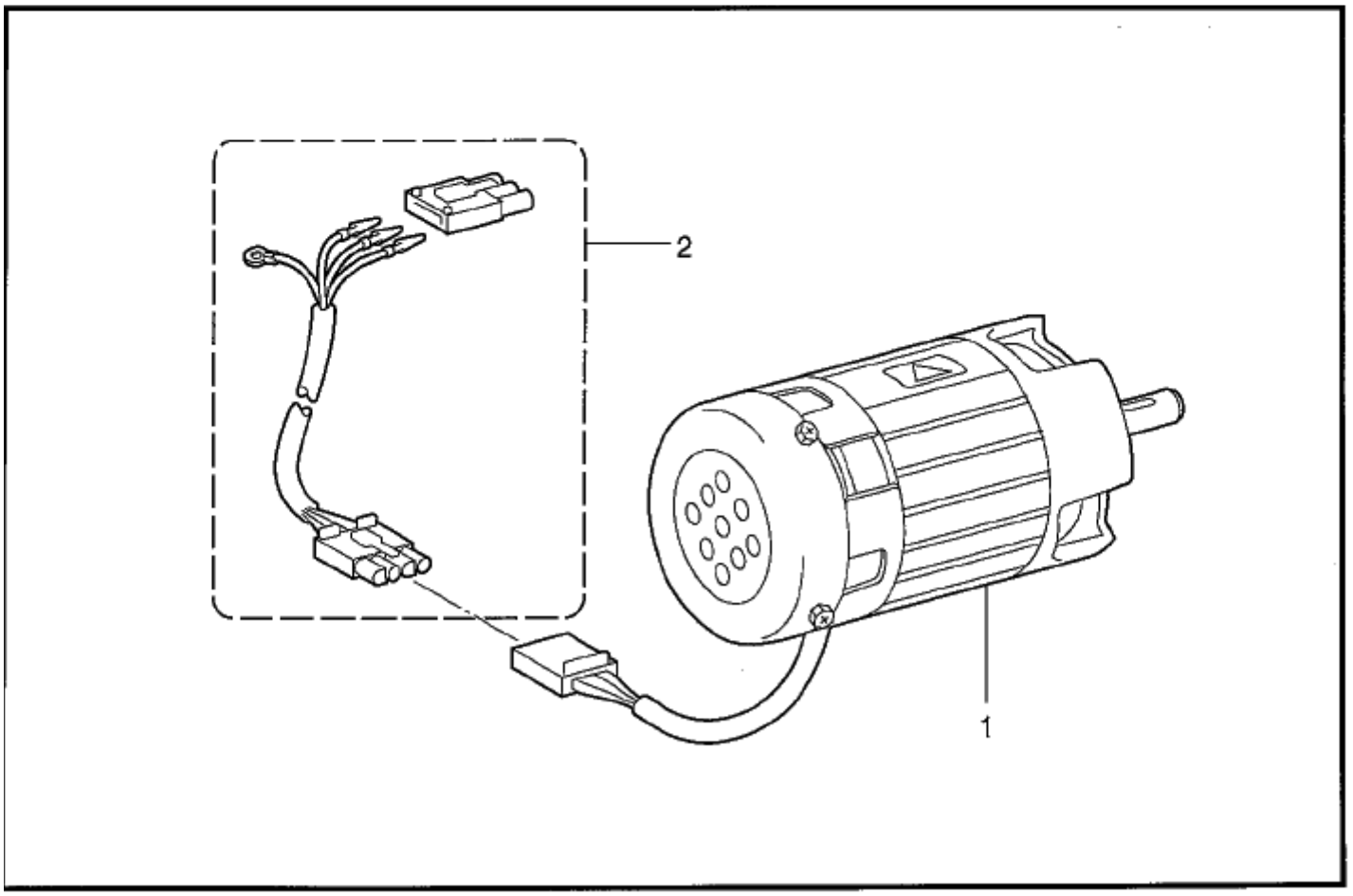

118-V30-652

S . 操作パネル関係 / Operation panel mechanism

REF.NO	CODE	Q'TY	ヒンメイ	NAME OF PARTS	RM
1	S55889001	1	ｿｳｻﾊﾟﾈﾙｿｳｸﾐ	OPERATION PANEL UNIT	
1-1	S55890001	1	ｿｳｻﾊﾟﾈﾙIMｸﾐ	OPERATION PANEL ASSY, IM	
1-1-1	S55891000	1	ﾏｴﾌﾚｰﾑIMｸﾐ	FRONT FRAME ASSY, IM	
1-1-2	S52091000	1	ｳｼﾛﾌﾚｰﾑｸﾐ	REAR FRAME ASSY	
1-1-3	S49495000	1	ﾊﾟﾈﾙﾖｺｶﾊﾞｰ	PANEL SIDE COVER	
1-1-4	S49496001	1	ﾊﾟﾈﾙﾖｺｶﾊﾞｰｶﾞｲﾄﾞ	PANEL SIDE COVER GUIDE	
1-1-5	087310815	2	ｶｯﾌﾟBﾀｲﾄ3X8	TAPTITE, CUP B M3X8	
1-1-6	0A4400805	1	+ﾅﾍﾞｻﾞｸﾐ4X8DA	SCREW, PAN (S/P WASHER) M4X8	
1-1-7-1	S49497001	1	ﾊﾟﾈﾙｷﾊﾞﾝｸﾐ	PANEL PCB ASSY	
1-1-7-2	S29023000	4	LEDGL9P040	LED :GL9P040	
1-1-7-3	S46703000	7	LEDPG5307S	LED :PG5307S	
1-1-7-4	S48579000	10	SWB3F-4050	SWITCH :B3F-4050	
1-1-7-5	U34870001	1	DIPSW KSP08	DIP SWITCH:KSP08	
1-1-7-6	S30280000	1	ﾌﾞｻﾞｰPKB24SPC3	BUZZER :PKB24SPC36	
1-1-7-7	UL0025000	1	ｺﾈｸﾀ3429-6002S	CONNECTOR:3429-6002SC	
1-1-8	S49510000	1	ﾊﾟﾈﾙｹｰﾌﾞﾙｸﾐ	PANEL HARNESS ASSY	
1-1-9	087311015	2	ｶｯﾌﾟBﾀｲﾄ3X10	TAPTITE, CUP B M3X10	
1-1-10	XA2220050	2	ｷﾊﾞﾝｵｻｴ	PCB HOLDER	
1-2	062300806	4	ﾅﾍﾞｺ3X8	SCREW, PAN M3X8	

118-V30-530

T . 動力台関係 / Power table

REF.NO	CODE	Q'TY	ヒンメイ	NAME OF PARTS	RM
1	J80868001	1	CIMﾓｰﾀ430ｸﾐﾎ	CIM MOTOR ASSY, 430	
2	S53055100	1	IMﾊｰﾈｽｸﾐ	HARNESS ASSY, IM	

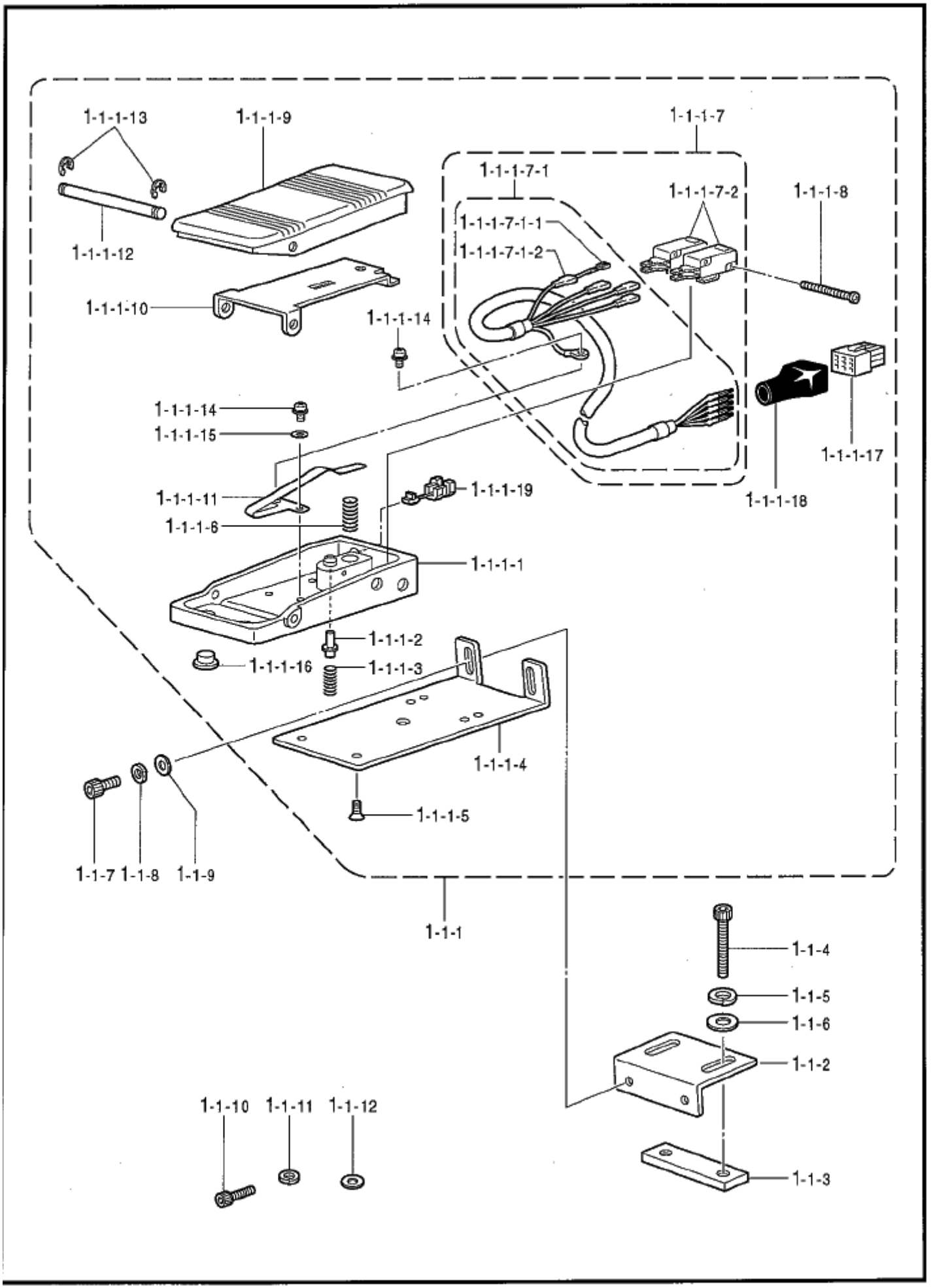
1-1-1-13
1-1-1-9
1-1-1-7
1-1-1-7-1
1-1-1-7-2
1-1-1-8
1-1-1-7-1-1
1-1-1-7-1-2
1-1-1-12
1-1-1-10
1-1-1-14
1-1-1-14
1-1-1-15
1-1-1-17
1-1-1-11
1-1-1-19
1-1-1-18
1-1-1-6
1-1-1-1
1-1-1-2
1-1-1-16
1-1-1-3
1-1-1-4
1-1-1-5
1-1-7
1-1-8
1-1-9
1-1-1
1-1-4
1-1-5
1-1-6
1-1-2
1-1-10
1-1-11
1-1-12
1-1-3

118-V30-651

U1 . 踏板関係 / Foot switch pedal mechanism

REF.NO	CODE	Q'TY	ヒンメイ	NAME OF PARTS	RM
1-1	S49667101	1	2ﾀﾞﾝﾌﾂﾄSWｾｯﾄ	2-STEP FOOT SWITCH SET	
1-1-1	S49668101	1	2ﾀﾞﾝﾌﾂﾄSWｸﾐ	2-STEP FOOT SWITCH ASSY	
1-1-1-1	S49669100	1	ﾌﾂﾄﾍﾟﾀﾞﾙﾀﾞｲｸﾐ	FOOT PEDAL BASE ASSY	
1-1-1-2	S49672001	1	2ﾀﾞﾝSWﾋﾟﾝ	2-STEP SWITCH PIN	
1-1-1-3	S38168001	1	ｱﾂｼｭｸﾊﾞﾈ	SPRING, COMPRESSION 10X30	
1-1-1-4	S38169201	1	ﾌﾂﾄSWｼﾞｲﾀB	FOOT SWITCH SUPPORT PLATE, B	
1-1-1-5	004400603	2	+ｻﾗｺﾈｼﾞ4X6	SCREW, FLAT M4X6	
1-1-1-6	S38170001	1	ﾌﾂﾄﾍﾟﾀﾞﾙﾊﾞﾈ	FOOT PEDAL SPRING	
1-1-1-7	S54648000	1	ﾌﾂﾄSWﾊｰﾈｽｸﾐ	FOOT SWITCH HARNESS ASSY	
1-1-1-7-1	S54646000	1	ﾌﾂﾄSWﾊｰﾈｽ	FOOOT SWITCH HARNESS	
1-1-1-7-1-1	S54644000	2	ｻｼｺﾐﾀﾝｼﾒｽ	TERMINAL, FEMAIL	
1-1-1-7-1-2	S54645000	2	ｾﾞﾂｴﾝｶﾊﾞｰ	INSULATION COVER	
1-1-1-7-2	S36260000	2	ｽｲｯﾁVXﾋﾟﾝﾎﾞﾀﾝ	MICRO SWITCH, VX :PIN BUTTON	
1-1-1-8	062302506	2	ﾅﾍﾞｺ3X25	SCREW, PAN M3X25	
1-1-1-9	S51451000	1	ﾌﾂﾄﾍﾟﾀﾞﾙ	FOOT PEDAL	
1-1-1-10	S49673000	1	ﾍﾟﾀﾞﾙﾎｺﾞｲﾀ	PEDAL PROTECTION PLATE	
1-1-1-11	S49674001	1	ｽｲｯﾁｵｻｴﾊﾞﾈ	SWITCH PRESSER SPRING	
1-1-1-12	S38177001	1	ﾌﾂﾄﾍﾟﾀﾞﾙｼﾞｸ	FOOT PEDAL SHAFT	
1-1-1-13	048050346	2	ﾄﾒﾜE5	RETAINING RING, E5	
1-1-1-14	052400606	2	ﾅﾍﾞｺﾊﾞﾈﾋﾗ4X6	SCREW, PAN (S/P WASHER) M4X6	
1-1-1-15	025040236	1	ﾋﾗｻﾞｶﾞﾈﾁｭｳ4	WASHER, PLAIN M 4	
1-1-1-16	117936001	4	ｺﾞﾑｾﾝ9.4	RUBBER CAP, 9.4	
1-1-1-17	S38180000	1	ｺﾈｸﾀ172169-1	CONNECTOR :172169-1	
1-1-1-18	S36682000	1	ｺﾈｸﾀｷｬｯﾌﾟ	CONNECTOR CAP	
1-1-1-19	S46694000	1	ｺｰﾄﾞﾌﾞｯｼｭKR61A	CORD BUSH :KR61A	
1-1-2	S38178101	1	ﾌﾂﾄSWｼﾞｲﾀA	FOOT SWITCH SUPPORT PLATE, A	
1-1-3	S38179101	1	ﾌﾂﾄSWｼﾞｲﾀC	FOOT SWITCH SUPPORT PLATE, C	
1-1-4	018082536	2	ｱﾅﾎﾞﾙﾄ8X25	BOLT, SOCKET M8X25	
1-1-5	028080246	2	ﾊﾞﾈｻﾞｶﾞﾈ2-8	WASHER, SPRING 2-8	
1-1-6	025080236	2	ﾋﾗｻﾞｶﾞﾈﾁｭｳ8	WASHER, PLAIN M 8	
1-1-7	018501036	2	ｱﾅﾎﾞﾙﾄ5X10	BOLT, SOCKET M5X10	
1-1-8	028050246	2	ﾊﾞﾈｻﾞｶﾞﾈ2-5	WASHER, SPRING 2-5	
1-1-9	025050236	2	ﾋﾗｻﾞｶﾞﾈﾁｭｳ5	WASHER, PLAIN M 5	
1-1-10	018401236	2	ｱﾅﾎﾞﾙﾄ4X12	BOLT, SOCKET M4X12	
1-1-11	028040246	2	ﾊﾞﾈｻﾞｶﾞﾈ2-4	WASHER, SPRING 2-4	
1-1-12	025040236	2	ﾋﾗｻﾞｶﾞﾈﾁｭｳ4	WASHER, PLAIN M 4	

U2 . 踏板関係 (オプション部品) / Foot switch pedal mechanism (Option parts)

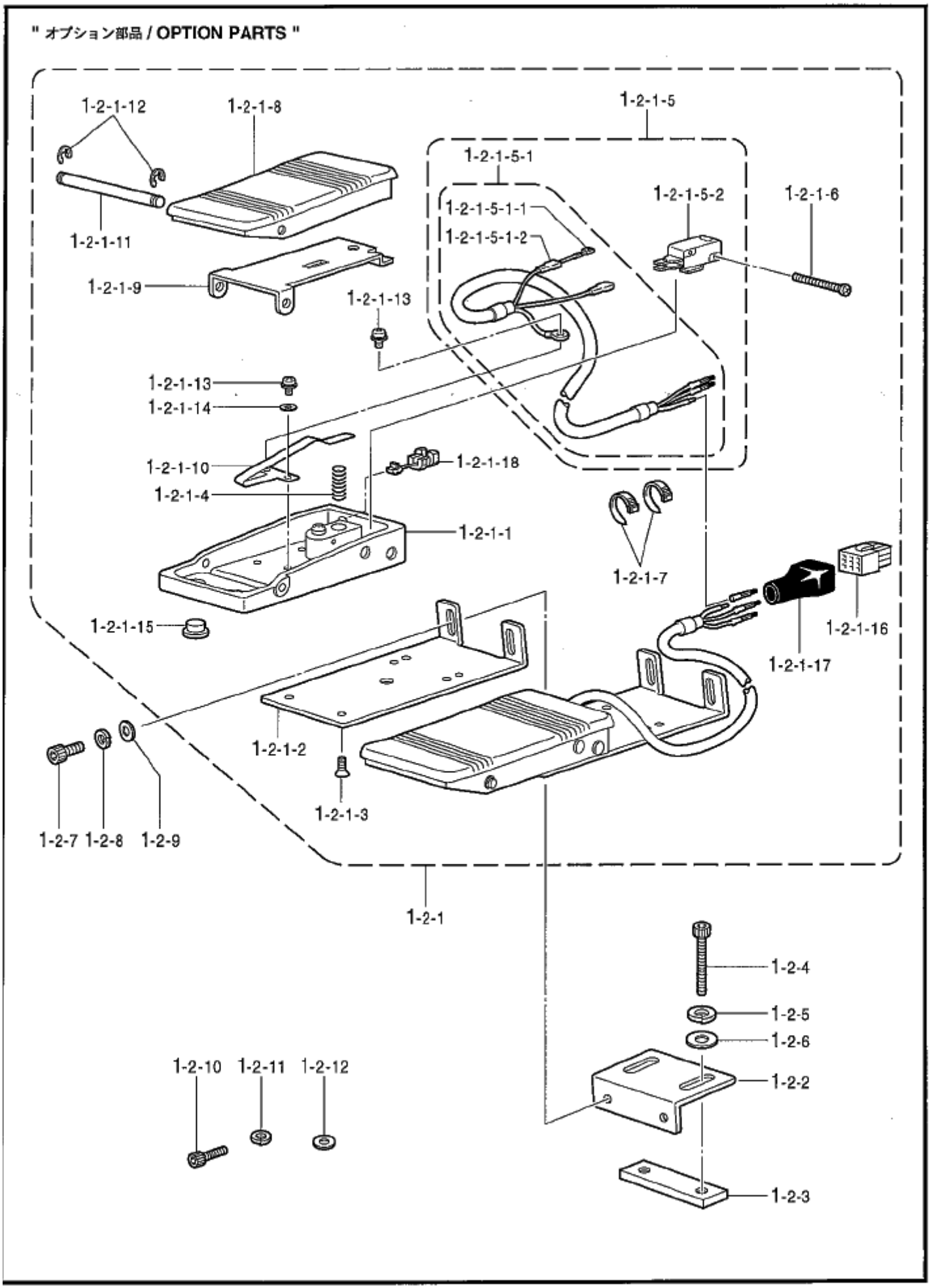

118-V38-651

U2 . 踏板関係 (オプション部品) / Foot switch pedal mechanism (Option parts)

REF.NO	CODE	Q'TY	ヒンメイ	NAME OF PARTS	RM
1-2	S49675101	1	2レンペダルセット	2-PEDAL FOOT SWITCH SET	
1-2-1	S49676101	1	2レンペダルクミ	2-PEDAL FOOT SWITCH ASSY	
1-2-1-1	S49669100	2	フットペダルダイクミ	FOOT PEDAL BASE ASSY	
1-2-1-2	S38169201	2	フットSWシジイタB	FOOT SWITCH SUPPORT PLATE, B	
1-2-1-3	004400603	4	+サラコネジ4X6	SCREW, FLAT M4X6	
1-2-1-4	S38170001	2	フットペダルバネ	FOOT PEDAL SPRING	
1-2-1-5	S54649000	1	2レンフットSWハーネスクミ	2-PEDAL FOOT SW HARNESS ASSY	
1-2-1-5-1	S54647000	2	2レンフットSWハーネス	2-PEDAL FOOT SWITCH HARNESS	
1-2-1-5-1-1	S54644000	4	サシコミタンシメス	TERMINAL, FEMAIL	
1-2-1-5-1-2	S54645000	4	ゼツエンカバー	INSULATION COVER	
1-2-1-5-2	S36260000	2	スイッチVXピンボタン	MICRO SWITCH, VX :PIN BUTTON	
1-2-1-6	062301205	4	ナベコ3X12	SCREW, PAN M3X12	
1-2-1-7	228475000	8	ケツソクバンド1.9X8	FASTENING BAND, 1.9X80	
1-2-1-8	S51451000	2	フットペダル	FOOT PEDAL	
1-2-1-9	S49673000	2	ペダルホゴイタ	PEDAL PROTECTION PLATE	
1-2-1-10	S49674001	2	スイッチオサエバネ	SWITCH PRESSER SPRING	
1-2-1-11	S38177001	2	フットペダルシジク	FOOT PEDAL SHAFT	
1-2-1-12	048050346	4	トメワE5	RETAINING RING, E5	
1-2-1-13	052400606	4	ナベコバネヒラ4X6	SCREW, PAN (S/P WASHER) M4X6	
1-2-1-14	025040236	2	ヒラザガネチユウ4	WASHER, PLAIN M 4	
1-2-1-15	117936001	8	ゴムセン9.4	RUBBER CAP, 9.4	
1-2-1-16	S38180000	1	コネクタ172169-1	CONNECTOR :172169-1	
1-2-1-17	S38060000	1	コネクタキヤツプ18X19	CONNECTOR CAP, 18X19	
1-2-1-18	S46694000	2	コードブツシユKR61A	CORD BUSH :KR61A	
1-2-2	S38178101	2	フットSWシジイタA	FOOT SWITCH SUPPORT PLATE, A	
1-2-3	S38179101	2	フットSWシジイタC	FOOT SWITCH SUPPORT PLATE, C	
1-2-4	018082536	4	アナボルト8X25	BOLT, SOCKET M8X25	
1-2-5	028080246	4	バネザガネ2-8	WASHER, SPRING 2-8	
1-2-6	025080236	4	ヒラザガネチユウ8	WASHER, PLAIN M 8	
1-2-7	018501036	4	アナボルト5X10	BOLT, SOCKET M5X10	
1-2-8	028050246	4	バネザガネ2-5	WASHER, SPRING 2-5	
1-2-9	025050236	4	ヒラザガネチユウ5	WASHER, PLAIN M 5	
1-2-10	018401236	4	アナボルト4X12	BOLT, SOCKET M4X12	
1-2-11	028040246	4	バネザガネ2-4	WASHER, SPRING 2-4	
1-2-12	025040236	4	ヒラザガネチユウ4	WASHER, PLAIN M 4	

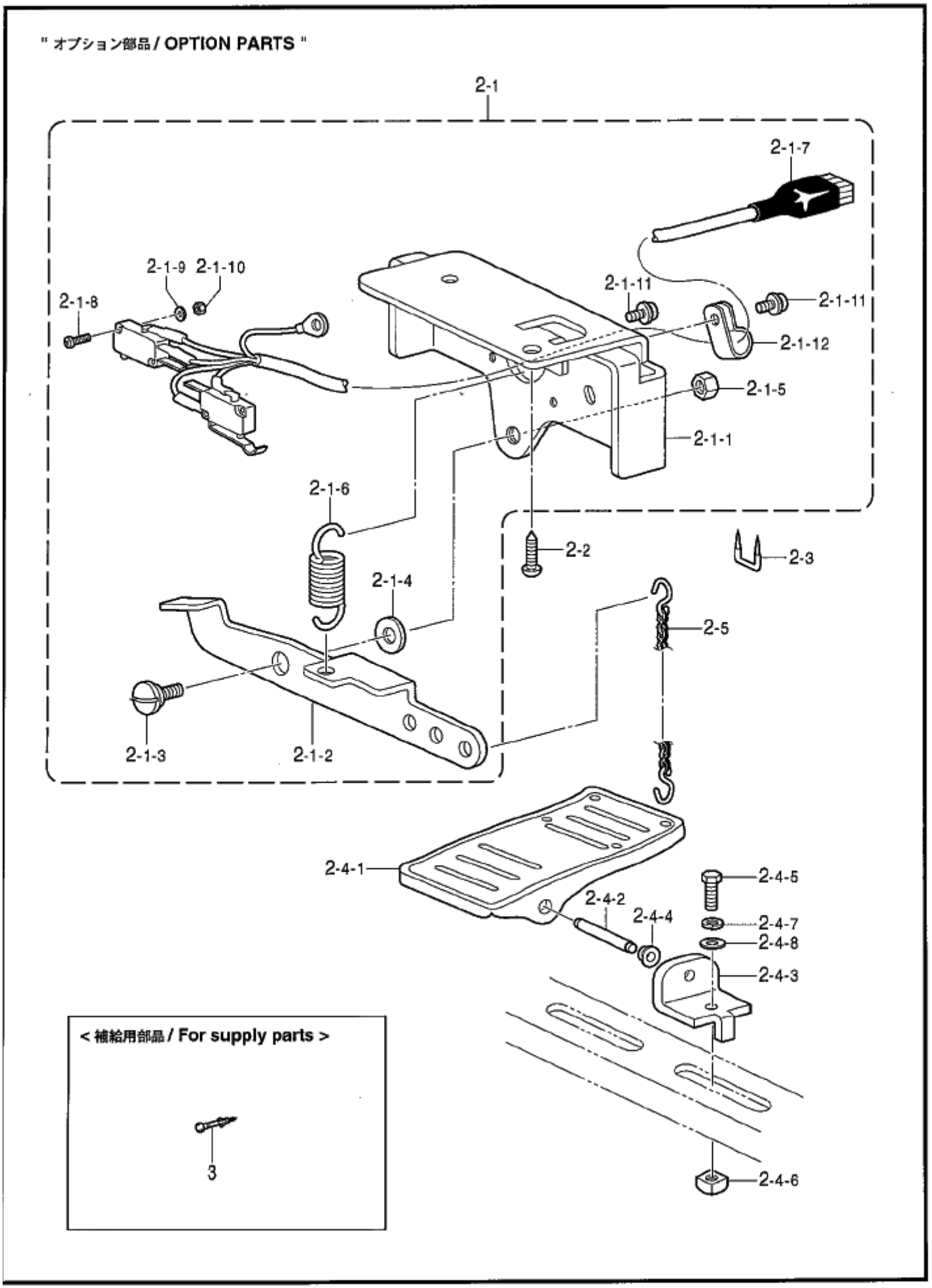
" オプション部品 / OPTION PARTS "
2-1
2-1-7
2-1-9
2-1-10
2-1-8
2-1-11
2-1-11
2-1-12
2-1-5
2-1-1
2-1-6
2-2
2-3
2-1-4
2-5
2-1-3
2-1-2
2-4-1
2-4-5
2-4-2
2-4-4
2-4-7
2-4-8
2-4-3
< 補給用部品 / For supply parts >
3
2-4-6

118-V30-651

U3 . 踏板関係 (オプション部品) / Foot switch pedal mechanism (Option parts)

REF.NO	CODE	Q'TY	ヒンメイ	NAME OF PARTS	RM
2	S46131001	1	2ﾀﾞﾝﾌﾂﾄSWｾｯﾄOP	2-STEP FOOT SWITCH SET, OP	
2-1	S46132001	1	2ﾀﾞﾝﾌﾂﾄSWｸﾐOP	2-STEP FOOT SWITCH ASSY, OP	
2-1-1	S46133001	1	SWｻｻｴﾀﾞｲ	SWITCH BRACKET	
2-1-2	S46134001	1	ﾌﾂﾄSWﾚﾊﾞｰ	FOOT SWITCH LEVER	
2-1-3	148904001	1	ﾀﾞﾝﾈｼﾞ7.94	SHOULDER SCREW, SM7.94	
2-1-4	025080236	1	ﾋﾗｻﾞｶﾞﾈﾁｭｳ8	WASHER, PLAIN M 8	
2-1-5	101268002	1	ﾅｯﾄ7.94	NUT, SM7.94	
2-1-6	S46135001	1	ﾌﾂﾄSWﾊﾞﾈ	FOOT SWITCH SPRING	
2-1-7	S46136000	1	ﾌﾂﾄSWﾊｰﾈｽｸﾐOP	FOOT SWITCH HARNESS ASSY, OP	
2-1-8	UD2390001	4	+ﾅﾍﾞｾﾑｽ3X20DA	SCREW, PAN (S/P WASHER) M3X20	
2-1-9	025030236	2	ﾋﾗｻﾞｶﾞﾈﾁｭｳ3	WASHER, PLAIN M 3	
2-1-10	021300206	2	2ｼｭﾅｯﾄ3	NUT, 2 M3	
2-1-11	052400806	2	ﾅﾍﾞｺﾊﾞﾈﾋﾗ4X8	SCREW, PAN (S/P WASHER) M4X8	
2-1-12	S00480000	1	ｺｰﾄﾞﾎﾙﾀﾞ#5	CORD HOLDER, 5N	
2-2	100666002	2	ﾏﾙﾓｸﾈｼﾞ5.5X20	WOOD SCREW, ROUND M5.5X20	
2-3	200190001	3	ｽﾃｯﾌﾟﾙ	STAPLE	
2-4	S01603009	1	ｵｻｴｱｹﾞﾌﾐｲﾀｸﾐ	TREADLE ASSY	
2-4-1	S01199003	1	ｵｻｴｱｹﾞﾌﾐｲﾀ	TREADLE PEDAL	
2-4-2	133188001	1	ｵｻｴｱｹﾞﾌﾐｲﾀｼﾞｸ	TREADLE SHAFT	
2-4-3	119707003	2	ﾌﾐｲﾀｼﾞｸｳｹ	TREADLE SHAFT BRACKET	
2-4-4	119708001	2	ﾌﾐｲﾀｼﾞｸｳｹｶﾗｰ	TREASLE BUSHING COLLAR	
2-4-5	017082206	2	ﾎﾞﾙﾄ8X22	BOLT, M8X22	
2-4-6	116694001	2	4ｶｸﾅｯﾄ8	NUT, SQUARE M8	
2-4-7	028080240	2	ﾊﾞﾈｻﾞｶﾞﾈ2-8	WASHER, SPRING 2-8	
2-4-8	025080236	2	ﾋﾗｻﾞｶﾞﾈﾁｭｳ8	WASHER, PLAIN M 8	
2-5	142656001	1	ｸｻﾘｸﾐ	CHAIN ASSY	
			＜補給用部品＞	＜For supply parts＞	
3	S49443000	1	ｺﾝﾀｸﾄ170364-1	CONTACT :170364-1	

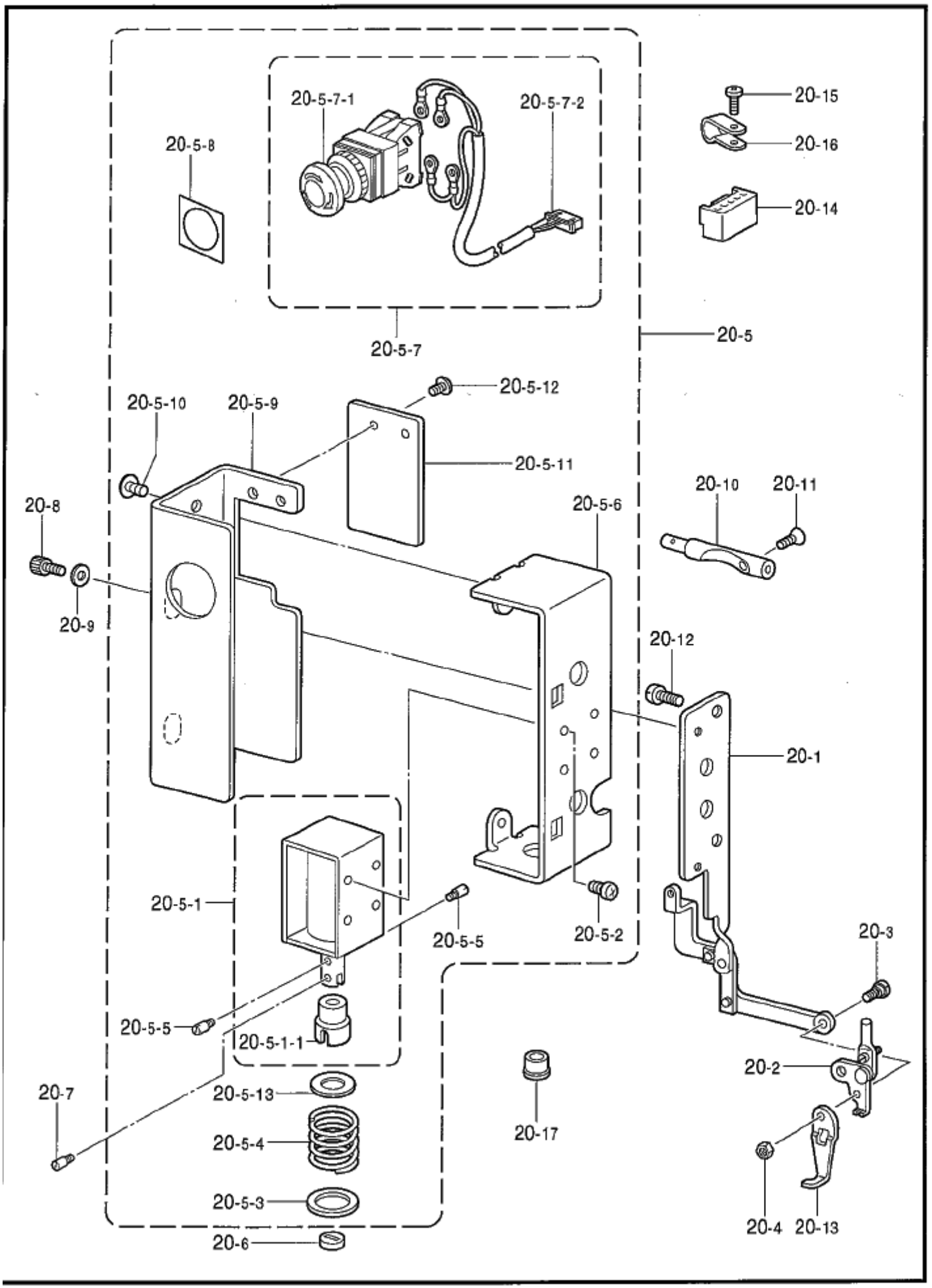
20-5-7-1
20-5-7-2
20-5-8
20-15
20-16
20-14
20-5-7
20-5
20-5-12
20-5-10
20-5-9
20-5-11
20-10
20-11
20-8
20-5-6
20-9
20-12
20-1
20-5-1
20-5-5
20-5-2
20-3
20-5-5
20-5-1-1
20-2
20-7
20-5-13
20-17
20-5-4
20-5-3
20-4
20-13
20-6

118-V30-940

V. 付属装置関係 (オプション部品) / Attachment set (Option parts)

REF.NO	CODE	Q'TY	ヒンメイ	NAME OF PARTS	RM
20	S49615009	1	ﾃﾞﾝｼﾞﾜｲﾊﾟｰｸﾐ	SOL. TYPE THREAD WIPER ASSY	
20-1	S41656001	1	ｲﾄﾊﾗｲﾚﾝｶﾝｸﾐ	TR-WIPER CONNECTING ROD ASSY	
20-2	S44600001	1	ﾜｲﾊﾟｰｳﾃﾞｸﾐ	THREAD WIPER ARM ASSY	
20-3	153112001	1	ﾀﾞﾝﾈｼﾞ3.57	SHOULDER SCREW, SM3.57	
20-4	021670202	1	ﾅｯﾄ2ｼｭ3.57	NUT, 2 SM3.57	
20-5	S49616009	1	ｿﾚﾉｲﾄﾞﾎﾞｯｸｽｸﾐ	SOLENOID BOX ASSY	
20-5-1	S49619001	1	ｲﾄﾊﾗｲｿﾚﾉｲﾄﾞｸﾐ	THREAD WIPER SOLENOID ASSY	
20-5-1-1	S41204050	1	ﾌﾟﾗﾝｼﾞｬｺﾞﾑ	PLUNGER RUBBER	
20-5-2	062300612	4	ﾅﾍﾞｺ3X6	SCREW, PAN M3X6	
20-5-3	S41205001	1	ﾋﾗｻﾞｶﾞﾈ	WASHER, PLAIN	
20-5-4	S41206001	1	ｲﾄﾊﾗｲﾊﾞﾈ	THREAD WIPER SPRING	
20-5-5	S25456001	2	ﾌﾟﾗﾝｼﾞｬﾋﾟﾝ	PLUNGER PIN	
20-5-6	S42017109	1	Wｿﾚﾉｲﾄﾞﾄﾘﾂｹｲﾀ	W-SOLENOID SETTING PLATE	
20-5-7	S49482000	1	EMﾛｯｸSWﾊｰﾈｽｸﾐ	EM-LOCK SWITCH & HARNESS ASSY	
20-5-7-1	S32335000	1	SW-AVS311N	SWITCH :AVS311N	
20-5-7-2	S49466000	1	EMSWﾊｰﾈｽ	EM-SWITCH HARNESS	
20-5-8	S37057001	1	EMｽｲｯﾁｽﾍﾟｰｻ3	EM-SWITCH SPACER, 3	
20-5-9	S42018109	1	Wｿﾚﾉｲﾄﾞｶﾊﾞｰ	WIPER SOLENOID COVER	
20-5-10	008400604	2	+ﾄﾗｽｺ4X6	SCREW, TRUSS M4X6	
20-5-11	S37806109	1	ｿﾚﾉｲﾄﾞｶﾊﾞｰEﾌﾀ	SOLENOID COVER LID, E	
20-5-12	008400604	2	+ﾄﾗｽｺ4X6	SCREW, TRUSS M4X6	
20-5-13	115007001	1	ｻﾞｶﾞﾈ	WASHER, PLAIN 13	
20-6	S41207000	1	ｽﾍﾟｰｻｺﾞﾑ	SPACER RUBBER	
20-7	S25456001	1	ﾌﾟﾗﾝｼﾞｬﾋﾟﾝ	PLUNGER PIN	
20-8	018400632	2	ｱﾅﾎﾞﾙﾄ4X6	BOLT, SOCKET M4X6	
20-9	100645003	2	ｻﾞｶﾞﾈ	WASHER	
20-10	S41657001	1	ｲﾄﾕﾙﾒﾛｯﾄﾞDW	TENSION RELEASE ROD, DW	
20-11	061350616	1	ｻﾗｺ35X6	SCREW, FLAT M3.5X6	
20-12	062680812	2	ﾅﾍﾞｺ437-40X8	SCREW, PAN SM4.37-40X8	
20-13	156206001	1	ﾜｲﾊﾟｰA	THREAD WIPER, A	
20-14	S49947000	1	ｺﾈｸﾀVHR-5N	CONNECTOR:VHR-5N	
20-15	060670612	3	ﾊﾞｲﾝﾄﾞ357-40X6	SCREW, BIND SM3.57-40X6	
20-16	149287000	3	ﾅｲﾛﾝｸﾗﾝﾌﾟ	CORD HOLDER, 7N	
20-17	104449001	1	ｺﾞﾑｾﾝ15.5	RUBBER CAP, 15.5	

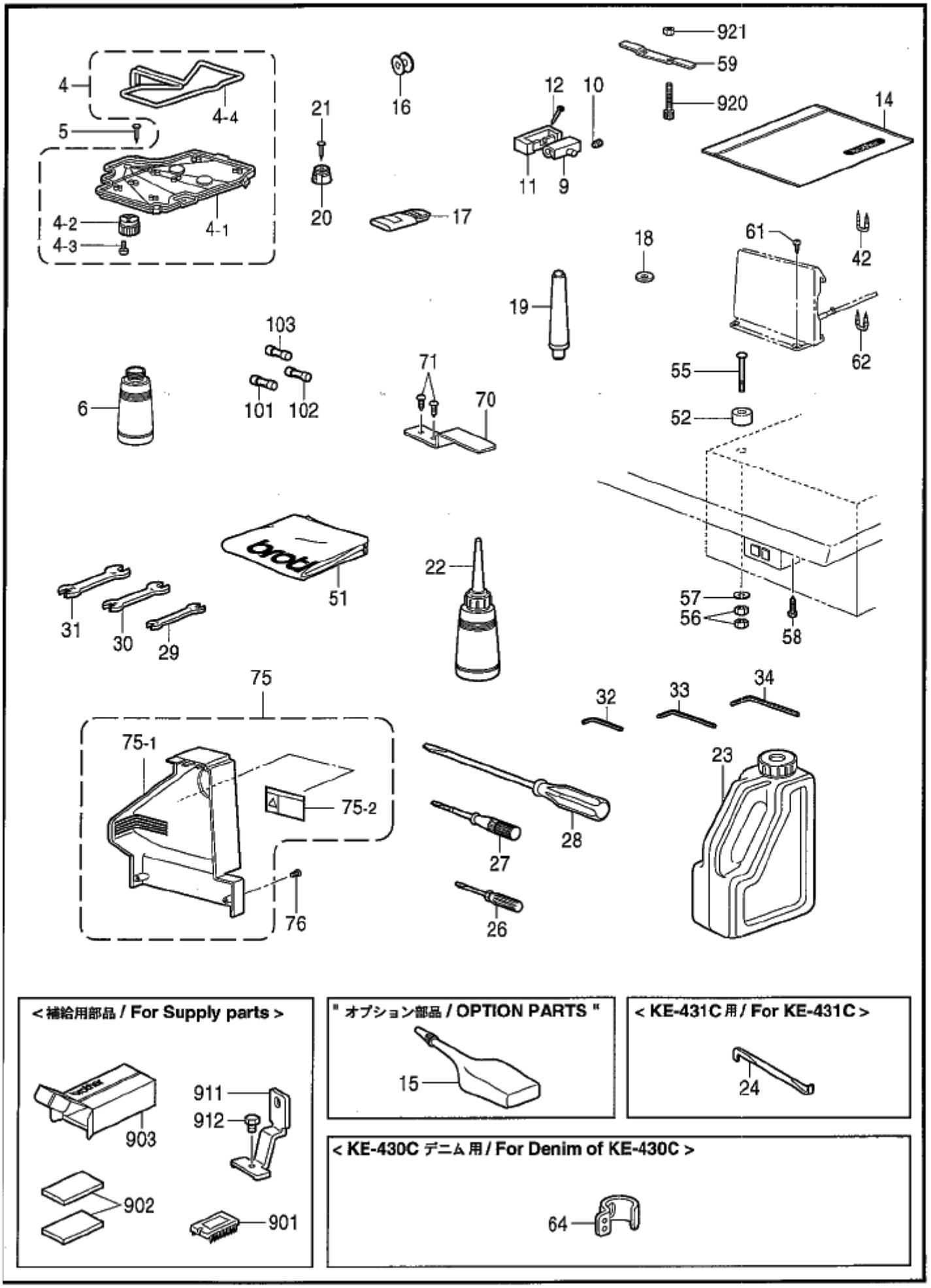
921
59
920
14
4
4-4
5
4-2
4-3
4-1
21
20
16
17
12
10
11
9
18
61
42
62
19
103
101
102
71
70
6
55
52
51
22
57
56
58
31
30
29
75
75-1
75-2
76
32
33
34
23
28
27
26
< 補給用部品 / For Supply parts >
903
911
912
902
901
" オプション部品 / OPTION PARTS "
15
< KE-431C 用 / For KE-431C >
24
< KE-430C デニム用 / For Denim of KE-430C >
64

118-V30-910

REF.NO	CODE	Q'TY	ヒンメイ	NAME OF PARTS	RM
4	S38039209	1	ｵｲﾙﾊﾟﾝｸﾐ	OIL PAN ASSY	
4-1	S38040209	1	ｵｲﾙﾊﾟﾝ	OIL PAN	
4-2	154467001	1	ﾊｲﾕｷｬｯﾌﾟ	DUST OILER	
4-3	037301215	2	Vﾅﾍﾞﾀｯﾋﾟﾝ3X12	TAPPING SCREW, PAN V M3X12	
4-4	S18093100	1	ｸﾐﾋﾓ4X4	WICK, 4X4 L=1100	
5	109714000	5	ｸｷﾞ	NAIL	
6	114486002	1	ﾎﾟﾘｵｲﾗｰﾀｲ	OILER	
9	143882001	2	ﾄｳﾌﾞﾋﾝｼﾞ	HEAD HINGE	
10	014760622	2	ｱﾅﾄﾒﾈｼﾞ5.95	SET SCREW, SOCKET SM5.95	
11	S49603000	2	ﾄｳﾌﾞﾋﾝｼﾞｳｹｺﾞﾑ	RUBBER CUSHION	
12	109714000	4	ｸｷﾞ	NAIL	
14	122991001	1	ﾌｿﾞｸﾋﾝﾎﾟﾘﾌｸﾛ	ACCESSORY BAG	
16	*	3	ﾎﾞﾋﾞﾝ	BOBBIN	
17	*	1	ﾊﾘ4ｺｲﾘｸﾐ	NEEDLE 4 PIECE ASSY	
18	S10208001	1	ｲﾄﾞｳﾊｶﾝｻﾞ <t=0.4>	MOVABLE KNIFE SPACER <t=0.4>	
18	S10208002	1	ｲﾄﾞｳﾊｶﾝｻﾞ <t=0.5>	MOVABLE KNIFE SPACER <t=0.5>	
18	S10208003	1	ｲﾄﾞｳﾊｶﾝｻﾞ <t=0.6>	MOVABLE KNIFE SPACER <t=0.6>	
19	S38045109	1	ﾏｸﾗｸﾐ	HEAD REST ASSY	
20	S49604000	2	ﾄｳﾌﾞｳｹｺﾞﾑ	RUBBER CUSHION	
21	109714000	2	ｸｷﾞ	NAIL	
22	114483002	1	ﾎﾟﾘｵｲﾗｰｸﾐ	OILER ASSY	
23	S55663001	1	ｵｲﾙﾀﾝｸｸﾐ	OIL TANK ASSY	
			<KE-431C用>	<For KE-431C>	
24	S08170001	1	Zｶﾞﾀﾈｼﾞﾏﾜｼ	SCREW-DRIVER, Z-TYPE	
26	142443001	1	ﾈｼﾞﾏﾜｼ1.9X52	SCREW-DRIVER, 1.9X52	
27	118837001	1	ﾈｼﾞﾏﾜｼ3.4X70	SCREW-DRIVER, 3.4X70	
28	101572101	1	ﾈｼﾞﾏﾜｼ5.5X190	SCREW-DRIVER, 5.5X190	
29	107779001	1	ｽﾊﾟﾅ6X7	WRENCH, 6X7	
30	100887001	1	ｽﾊﾟﾅ8X9	WRENCH, 8X9	
31	107780001	1	ｽﾊﾟﾅ10X12	WRENCH, 10X12	
33	142721001	1	6ｶｸﾎﾞｳｽﾊﾟﾅ3	HEXAGONAL WRENCH, 3	
34	118064001	1	6ｶｸﾎﾞｳｽﾊﾞﾅ4	HEXAGONAL WRENCH, 4	
42	200190001	5	ｽﾃｯﾌﾟﾙ	STAPLE	
51	144226001	1	ﾄｳﾌﾞｶﾊﾞｰ	HEAD COVER	
			<ｺﾝﾄﾛｰﾙBox取付用>	<Setting the control box>	
52	S33006001	4	ﾓｰﾀｽﾍﾟｰｻ	MOTOR SPACER	
55	133740006	4	ｶｸﾈﾎﾞﾙﾄ6X70	BOLT, SQUARE M6X70	
56	021060106	8	1ｼﾕﾅｯﾄ6	NUT, 1 M6	
57	025060336	4	ﾋﾗｻﾞｶﾞﾈﾀﾞｲ6	WASHER, PLAIN L 6	
			<電源SW取付用>	<Setting the power switch>	
58	032461606	2	+ﾏﾙﾓｸﾈｼﾞ4.5X16	WOOD SCREW, ROUND M4.5X16	
59	S38044001	1	ﾋﾝｼﾞｵｻｴ	HINGE PRESSER	
61	031412506	4	ﾏﾙﾓｸﾈｼﾞ4.1X25	WOOD SCREW, ROUND M4.1X25	
62	200190001	3	ｽﾃｯﾌﾟﾙ	STAPLE	
			<KE-430Cﾃﾞﾆﾑ用>	<For Denim of KE-430C>	
64	S41222101	1	ﾊﾘﾎﾞｳｲﾄｱﾝﾅｲB	NEEDLE BAR THREAD GUIDE, B	
70	S55633001	1	ｽｲｯﾁｵｼｲﾀ	SWITCHING PLATE	
71	032422003	2	+ﾏﾙﾓｸﾈｼﾞ4.1X20	WOOD SCREW, ROUND M4.1X20	

付属品の明細は変更することがあります。
The details of included accessories are subject to change.

921
59
920
4
4-4
5
4-2
4-3
4-1
21
20
16
17
12
10
11
9
14
18
61
42
62
19
103
101
102
71
70
6
55
52
51
22
31
30
29
57
56
58
75
75-1
75-2
76
32
33
34
23
28
27
26

< 補給用部品 / For Supply parts >

903
911
912
902
901

" オプション部品 / OPTION PARTS "

15

< KE-431C 用 / For KE-431C >

24

< KE-430C デニム用 / For Denim of KE-430C >

64

118-V30-910

REF.NO	CODE	Q'TY	ヒンメイ	NAME OF PARTS	RM
			＜国内用＞	＜For Japan only＞	
75	S55311001	1	ﾍﾞﾙﾄｶﾊﾞｰIMｸﾐ	————	
75-1	S51097000	1	ﾍﾞﾙﾄｶﾊﾞｰIM	————	
75-2	S38350001	1	ｿｳｻﾁﾕｳｲﾗﾍﾞﾙ.ﾜ	————	
			＜輸出用＞	＜For Export＞	
75	S55311002	1	ﾍﾞﾙﾄｶﾊﾞｰIMｸﾐ	BELT COVER ASSY, IM	
75-1	S51097000	1	ﾍﾞﾙﾄｶﾊﾞｰIM	BELT COVER, IM	
75-2	S38349001	1	ｿｳｻﾁﾕｳｲﾗﾍﾞﾙ.ｴｲ	LABEL, OPERATION ENG.	
76	062401006	2	ﾅﾍﾞｺ4X10	SCREW, PAN M4X10	
101	S08030000	1	Gﾋｭｰｽﾞ5AFB	FUSE, 5A :FB	
102	153242000	1	ﾋｭｰｽﾞ6A	FUSE, 6A	
103	S48580000	1	GFUSE7AFB	FUSE, 7A :FB	
920	018405032	2	ｱﾅﾎﾞﾙﾄ4X50	BOLT, SOCKET M4X50	
921	021400102	2	ﾅｯﾄ1ｼﾕ4	NUT, 1 M4	
			″ オプション部品 ″	″ OPTION PARTS ″	
15	S06706001	1	ｼﾘｺﾝｵｲﾙ	SILICONE OIL	
			″ 補給用部品 ″	″ For supply parts ″	
901	UA4817000	1	MOSLSI27C2001	EPROM:27C2001	
902	S60400000	2	ﾄﾞｳﾃﾞﾝﾊﾟｯﾄ30X50	CONDUCTIVE PAD, 30X50	
903	S60711001	1	PROM 1ｲﾚﾊｺ	PROM CARTON BOX	
			＜エリア30X10mm用＞	＜For Area ″30X10mm″＞	
911	156006001	2	ｵｻｴｱｼ	WORK CLAMP, U	
912	017680512	2	ﾎﾞﾙﾄ4.37X5	BOLT, SM4.37X5	

付属品の明細は変更することがあります。
The details of included accessories are subject to change.

< KE-430C, KE-432C用 / For KE-430C & KE-432C >

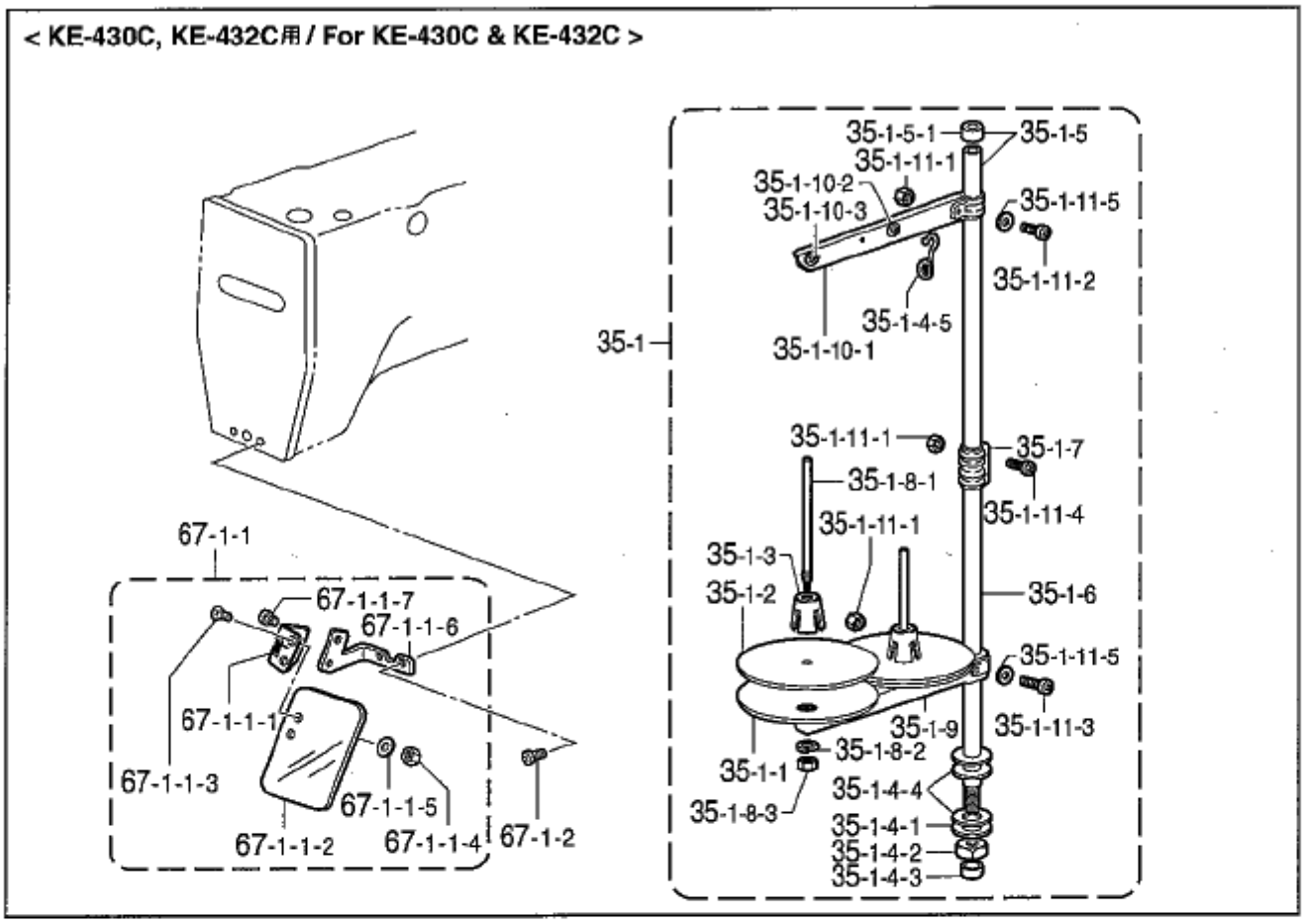

< KE-431C用 / For KE-431C >

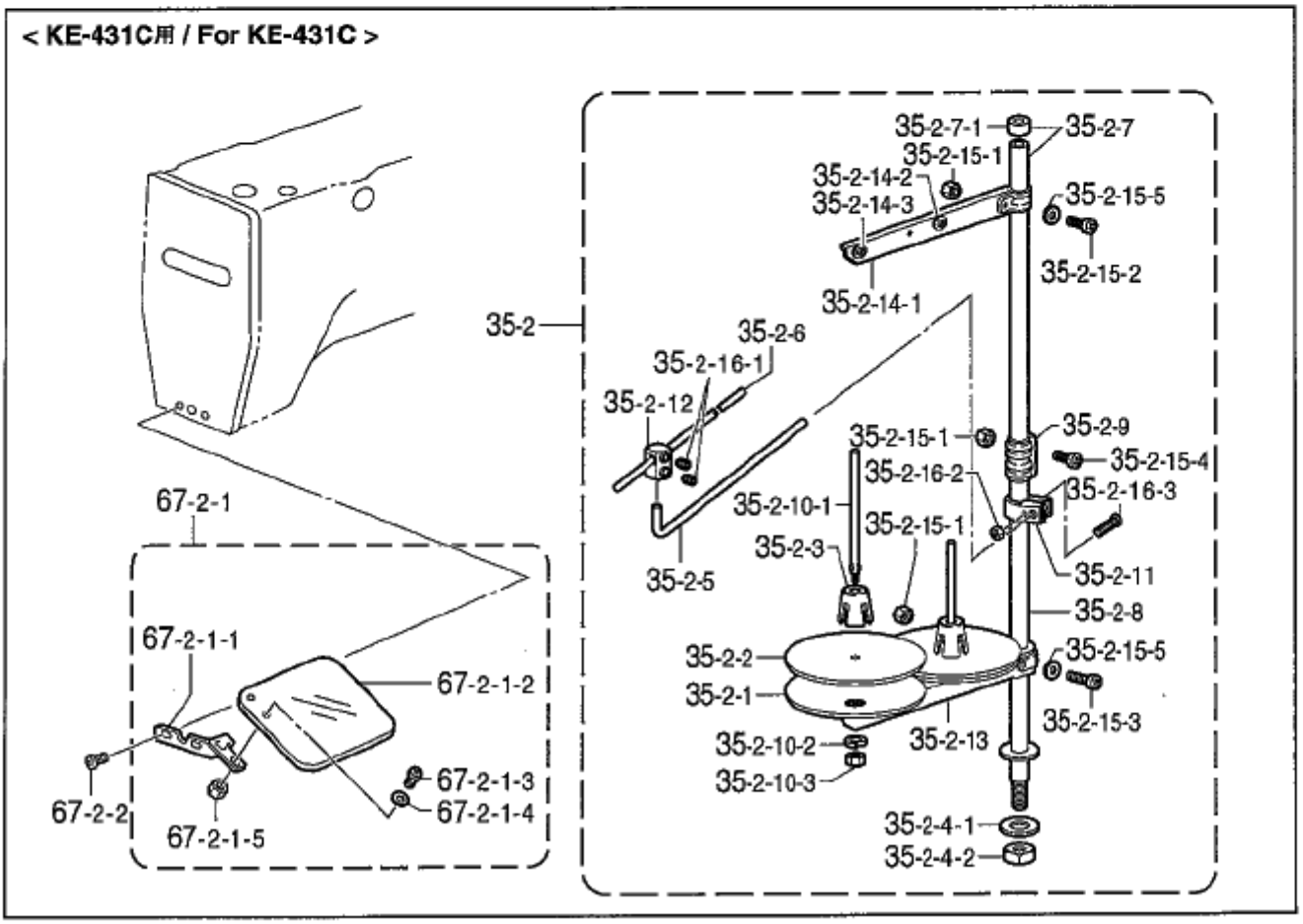

118-V30-910

REF.NO	CODE	Q'TY	ヒンメイ	NAME OF PARTS	RM
			＜KE-430C, KE-432C用＞	＜For KE-430C & KE-432C＞	
35-1	S02763402	1	ｲﾄﾀﾃﾀﾞｲｸﾐ2DR	COTTON STAND ASSY, 2DR	
35-1-1	S51283001	2	ｳｹｻﾞﾗ	SPOOL STAND BASE	
35-1-2	150182000	2	ｽﾌﾟｰﾙﾏｯﾄ	SPOOL MAT	
35-1-3	S51282001	2	ｽﾌﾟｰﾙｸｯｼｮﾝ	SPOOL CUSHION	
35-1-4	S02777001	1	ﾊﾟｲﾌﾟDﾈｼﾞｾｯﾄB	PIPE (D) SCREW SET, B	
35-1-4-1	150206002	1	ﾋﾗｻﾞｶﾞﾈ16	WASHER, PLAIN 16	
35-1-4-2	S38648001	1	6ｶｸﾅｯﾄU5/8	NUT, U5/8-28	
35-1-4-3	150174000	1	ｺﾗﾑｷｬｯﾌﾟ	COLUMN CAP	
35-1-4-4	S01005000	2	ｲﾄﾀﾃｺﾞﾑ	RUBBER WASHER	
35-1-4-5	S02747101	1	ｲﾄｶｹﾊﾞﾈ	SPRING	
35-1-5	S40640001	1	ｺﾗﾑﾊﾟｲﾌﾟｷｬｯﾌﾟﾂｷ	COLUMN PIPE W/CAP	
35-1-5-1	150174000	1	ｺﾗﾑｷｬｯﾌﾟ	COLUMN CAP	
35-1-6	156112003	1	ｺﾗﾑﾊﾟｲﾌﾟD	COLUMN PIPE, D	
35-1-7	150173003	1	ｺﾗﾑｼﾞｮｲﾝﾄ	COLUMN JOINT	
35-1-8	S21798001	2	ｽﾌﾟｰﾙﾈｼﾞｾｯﾄ	SPOOL & SCREW SET	
35-1-8-1	150179002	2	ｽﾌﾟｰﾙｼﾞｸB	SPOOL SHAFT, B	
35-1-8-2	028050246	2	ﾊﾞﾈｻﾞｶﾞﾈ2-5	WASHER, SPRING 2-5	
35-1-8-3	021500106	2	1ｼｭﾅｯﾄ5	NUT, 1 M5	
35-1-9	S02778002	1	ｽﾌﾟｰﾙﾎﾙﾀﾞｰ2	SPOOL HOLDER, 2	
35-1-10	S02786002	1	ｽﾚｯﾄﾞﾊﾝｶﾞｰｸﾐ2	THREAD HANGER ASSY, 2	
35-1-10-1	S02787002	1	ｽﾚｯﾄﾞﾊﾝｶﾞｰ2	THREAD HANGER, 2	
35-1-10-2	150183000	2	ｲﾄｶｹﾊﾝｶﾞｰﾀﾞｲ	THREAD HANGER BASE	
35-1-10-3	142990001	2	ｽﾚｯﾄﾌﾞｯｼｭ	THREAD BUSH	
35-1-11	S40641001	1	ｽﾌﾟｰﾙｼﾞｸﾈｼﾞｾｯﾄA	SPOOL SHAFT & SCREW SET, A	
35-1-11-1	021500106	4	1ｼｭﾅｯﾄ5	NUT, 1 M5	
35-1-11-2	062501406	1	ﾅﾍﾞｺ5X14	SCREW, PAN M5X14	
35-1-11-3	S59931001	1	ﾅﾍﾞｺM5X32	SCREW, PAN M5X32	
35-1-11-4	062501406	2	ﾅﾍﾞｺ5X14	SCREW, PAN M5X14	
35-1-11-5	026050136	2	ﾋﾗｻﾞｶﾞﾈｺｶﾞﾀ5	WASHER, PLAIN S 5	
67-1	S49602201	1	ｱｲｶﾞｰﾄﾞｾｯﾄC	EYE GUARD SET, C	
67-1-1	S44493101	1	ｱｲｶﾞｰﾄﾞｸﾐ	EYE GUARD ASSY	
67-1-1-1	S44483001	1	ﾁｮｳﾊﾞﾝｸﾐ	HINGE ASSY	
67-1-1-2	S44485001	1	ｱｲｶﾞｰﾄﾞ	EYE GUARD	
67-1-1-3	061660806	2	ｻﾗｺ318-40X8	SCREW, FLAT SM3.18-40X8	
67-1-1-4	021660102	2	ﾅｯﾄ1ｼｭ3.18	NUT, 1 SM3.18	
67-1-1-5	026030232	2	ﾋﾗｻﾞｶﾞﾈﾐｶﾞｷ 3	WASHER, PLAIN M 3	
67-1-1-6	S44486101	1	ｱｲｶﾞｰﾄﾞﾎﾙﾀﾞｰA	EYE GUARD HOLDER, A	
67-1-1-7	062670512	2	ﾅﾍﾞｺ357-40X5	SCREW, PAN SM3.57-40X5	
67-1-2	062671016	2	ﾅﾍﾞｺ357-40X10	SCREW, PAN SM3.57-40X10	
			＜KE-431C用＞	＜For KE-431C＞	
35-2	S40574109	1	ｲﾄﾀﾃﾀﾞｲｸﾐ2DTHF	COTTON STAND ASSY, 2DTHF	
35-2-1	S51283001	2	ｳｹｻﾞﾗ	SPOOL STAND BASE	
35-2-2	150182000	2	ｽﾌﾟｰﾙﾏｯﾄ	SPOOL MAT	
35-2-3	S51282001	2	ｽﾌﾟｰﾙｸｯｼｮﾝ	SPOOL CUSHION	
35-2-4	S02775001	1	ﾊﾟｲﾌﾟﾈｼﾞｾｯﾄA	PIPE SCREW SET, A	
35-2-4-1	150206002	1	ﾋﾗｻﾞｶﾞﾈ16	WASHER, PLAIN 16	
35-2-4-2	S38648001	1	6ｶｸﾅｯﾄU5/8	NUT, U5/8-28	
35-2-5	S04109001	1	ｲﾄｱﾝﾅｲｻｻｴﾎﾞｳ	THREAD GUIDE SUPPORT BAR	
35-2-6	142997001	1	ｲﾄｱﾝﾅｲ3	THREAD GUIDE, 3	
35-2-7	S40640001	1	ｺﾗﾑﾊﾟｲﾌﾟｷｬｯﾌﾟﾂｷ	COLUMN PIPE W/CAP	
35-2-7-1	150174000	1	ｺﾗﾑｷｬｯﾌﾟ	COLUMN CAP	
35-2-8	156112003	1	ｺﾗﾑﾊﾟｲﾌﾟD	COLUMN PIPE, D	
35-2-9	150173003	1	ｺﾗﾑｼﾞｮｲﾝﾄ	COLUMN JOINT	

付属品の明細は変更することがあります。
The details of included accessories are subject to change.

REF.NO	CODE	Q'TY	ヒンメイ	NAME OF PARTS	RM
			<KE-431C用>	<For KE-431C>	
35-2-10	S21798001	2	ｽﾌﾟｰﾙﾈｼﾞｾｯﾄ	SPOOL & SCREW SET	
35-2-10-1	150179002	2	ｽﾌﾟｰﾙｼﾞｸB	SPOOL SHAFT, B	
35-2-10-2	028050246	2	ﾊﾞﾈｻﾞｶﾞﾈ2-5	WASHER, SPRING 2-5	
35-2-10-3	021500106	2	1ｼｭﾅｯﾄ5	NUT, 1 M5	
35-2-11	150185009	1	ｲﾄｱﾝﾅｲﾎﾙﾀﾞｰ	THREAD GUIDE HOLDER	
35-2-12	138843001	1	ｻｻｴﾎﾞｳﾂｷﾞﾃ	JOINT	
35-2-13	S02778002	1	ｽﾌﾟｰﾙﾎﾙﾀﾞｰ2	SPOOL HOLDER, 2	
35-2-14	S02786002	1	ｽﾚｯﾄﾞﾊﾝｶﾞｰｸﾐ2	THREAD HANGER ASSY, 2	
35-2-14-1	S02787002	1	ｽﾚｯﾄﾞﾊﾝｶﾞｰ2	THREAD HANGER, 2	
35-2-14-2	150183000	2	ｲﾄｶｹﾊﾝｶﾞｰﾀﾞｲ	THREAD HANGER BASE	
35-2-14-3	142990001	2	ｽﾚｯﾄﾞﾌﾞｯｼｭ	THREAD BUSH	
35-2-15	S40641001	1	ｽﾌﾟｰﾙｼﾞｸﾈｼﾞｾｯﾄA	SPOOL SHAFT & SCREW SET, A	
35-2-15-1	021500106	4	1ｼｭﾅｯﾄ5	NUT, 1 M5	
35-2-15-2	062501406	1	ﾅﾍﾞｺ5X14	SCREW, PAN M5X14	
35-2-15-3	S59931001	1	ﾅﾍﾞｺM5X32	SCREW, PAN M5X32	
35-2-15-4	062501406	2	ﾅﾍﾞｺ5X14	SCREW, PAN M5X14	
35-2-15-5	026050136	2	ﾋﾗｻﾞｶﾞﾈｺｶﾞﾀ5	WASHER, PLAIN S 5	
35-2-16	S40643001	1	ﾎﾙﾀﾞｰﾂｷﾞﾃﾈｼﾞｾｯﾄ	HOLDER JOINT & SCREW SET	
35-2-16-1	014060632	2	ｱﾅｸﾎﾞﾐ6X6	SET SCREW, SOCKET (CP) M6X6	
35-2-16-2	021500106	1	1ｼｭﾅｯﾄ5	NUT, 1 M5	
35-2-16-3	S59931001	1	ﾅﾍﾞｺM5X32	SCREW, PAN M5X32	
67-2	S50000201	1	ｱｲｶﾞｰﾄﾞｾｯﾄD	EYE GUARD SET, D	
67-2-1	S36685101	1	ｱｲｶﾞｰﾄﾞｸﾐ	EYE GUARD ASSY	
67-2-1-1	S36686101	1	ｱｲｶﾞｰﾄﾞｻｻｴｲﾀ	EYE GUARD SUPPORT PLATE	
67-2-1-2	S52097001	1	ｱｲｶﾞｰﾄﾞ	EYE GUARD	
67-2-1-3	062660712	2	ﾅﾍﾞｺ318-40X7	SCREW, PAN SM3.18-40X7	
67-2-1-4	025660132	2	ﾋﾗｻﾞｶﾞﾈｼｮｳ3.18	WASHER, PLAIN S 3.18	
67-2-1-5	021660102	2	ﾅｯﾄ1ｼｭ3.18	NUT, 1 SM3.18	
67-2-2	062671016	2	ﾅﾍﾞｺ357-40X10	SCREW, PAN SM3.57-40X10	

付属品の明細は変更することがあります。
The details of included accessories are subject to change.

Sp1 . 仕様別部品一覧表 (KE-430C) / Different parts list (KE-430C)

KE-430C, 431C, 432C には下記部品が用意されていますので幅広い用途にご活用ください。
The following are standard gauge parts according to each specification.

◎表中☆の部品は、BAS-311Fプログラム式電子ミシンと共通です。
◎In the following table, parts marked with ☆ are common with the BAS-311F.

KE-430C			
品名 Part name / 仕様 Spec.	-2	-1	-7
(J-53) 針穴板 Needle hole plate	(φ2.6) S10212-101 < E > ☆	(φ2.2) S49980-001 < FM >	(φ1.6) S10211-001 < A > ☆
(E-24) ボビンケース組 Bobbin case assy	152690-401 < B >	159610-301 < A >	159610-301 < A >
	S59221-001 < LC > ☆		
(E-24-1) ボビンケース調子ばね Tension spring	154340-101	154339-101	154339-101
	S48664-001 < AN > ☆		
(E-24-2) ボビンケースばねねじ Screw	154341-001		154341-001
	S16492-101 ☆		
(E-24-3) 空転防止ばね Spring, anti-spin	154342-001	159612-001	159612-001
	S15667-001 ☆	S15667-001 ☆	
(E-25) ボビン Bobbin	159613-051		159613-051
	S15665-001 < LA > ☆		
(E-22) 中がま箱組 Shuttle hook assy, w/box	SA1882-001 < B >	SA1881-001 < A >	SA1881-001 < A >
	SA1890-001 < LG > ☆	SA2173-001 < LF > ☆	
(E-21) 大がま Shuttle race body	152686-101 < B >	152682-101 < A >	
(G-14) 糸調子ばね Spring,tension	107606-001	104525-001	
(G-10) 糸取りばね Thread take-up spring	144588-001 < B >	145519-001	

Sp1 . 仕様別部品一覧表 (KE-430C) / Different parts list (KE-430C)

◎表中☆の部品は、BAS-311Fプログラム式電子ミシンと共通です。
◎In the following table, parts marked with ☆ are common with the BAS-311F.

KE-430C			
品名 Part name / 仕様 Spec.	-2	-1	-7
(G-25) 針棒糸案内 Needle bar Thread guide	152890-001 <A>	S41222-101 <B>	
(Z1-17) ミシン針4個入り組 Needle assy	SA1579-019	SA1752-014	SA1752-009
(B1-26) 針 Needle	DP×17 NY <#19> S37928-019	DP×5 <#14> 107415-014	DP×5 <#9> 107415-009
(C2-37) 押え腕組 Work clamp arm assy	S49591-301	S49594-301	S51095-301
(C2-37-8, 37-9) 押え足 Work clamp, U	5.6×23 (3mm用) R. 153608-101 L. 154527-001	4×18 (2mm用) R. 152777-001 L. 152778-001	4×12 (2mm用) R. S49695-001 L. S49694-001
(C2-100) 送り板 Feed plate	S49697-001	12×31 (沈下式 L Submerged-type, L) S49698-001	5.4×13.4 (2mm用) S49696-001

◎標準の押え足、送り板のサイズは、次のとおりです。(実際の縫製エリアは、内枠寸法から約1.5mm内側になります。)
◎Standard sizes for work clamps and feed plates are as follows:
(The actual sewing area has 1.5mm margin on every size; inside the lines which the dimensions indicate.)

機種 / Model	KE-430C		
仕様 / Spec.	-2	-1	-7
R	153608-101	152777-001	S49695-001
L	154527-001	152778-001	S49694-001
(C2-37-8, 37-9) 押え足 Work clamp	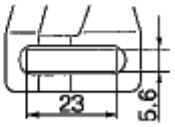	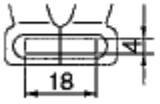	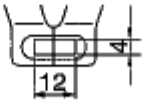
(C2-100) 送り板 Feed plate	S49697-001 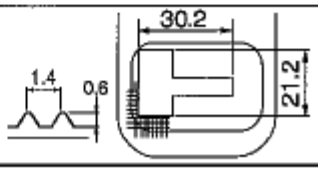	S49698-001 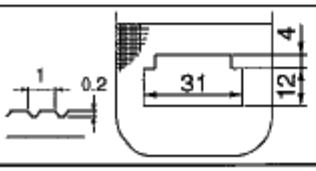	S49696-001 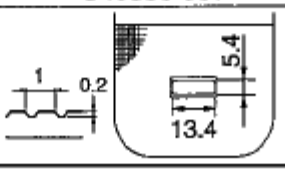

118-V30-Sp1

Sp2 . 仕様別部品一覧表 (KE-431C, KE-432C) / Different parts list (KE-431C, KE-432C)

◎表中☆の部品は、BAS-311Fプログラム式電子ミシンと共通です。
◎In the following table, parts marked with ☆ are common with the BAS-311F.

品名 Part name / 仕様 Spec.	KE-431C -2	KE-431C -3	KE-432C -
(J-53) 針穴板 Needle hole plate	(φ2.2) S49980-001 < FM >		(φ2.2) S49980-001 < FM >
(E-24) ボビンケース組 Bobbin case assy	159610-301 < A >		159610-301 < A >
	S59221-401 < LC > ☆		S59221-001 < LC > ☆
(E-24-1) ボビンケース調子ばね Tension spring	154339-101		154339-101
	S48664-101 < AN > ☆		S48664-101 < AN > ☆
(E-24-2) ボビンケースばねねじ Screw	154341-001		154341-001
	S16492-101 ☆		S16492-101 ☆
(E-24-3) 空転防止ばね Spring, anti-spin	159612-001		159612-001
	S15667-001 ☆		S15667-001 ☆
(E-25) ボビン Bobbin	159613-051		159613-051
	S15665-001 < LA > ☆		S15665-001 < LA > ☆
(E-22) 中がま箱組 Shuttle hook assy, w/box	SA1881-001 < A >		SA1881-001 < A >
	SA2173-001 < LF > ☆		SA2173-001 < LF > ☆
(E-21) 大がま Shuttle race body	152682-101 < A >		152682-101 < A >
(G-14) 糸調子ばね Spring,tension	104525-001		104525-001
(G-10) 糸取りばね Thread take-up spring	145519-001		145519-001
(G-25) 針棒糸案内 Thread guide, ;n-bar A B	S41222-101 < B >		S41222-101 < B >

118-V31-Sp2

Sp2 . 仕様別部品一覧表 (KE-431C, KE-432C) / Different parts list (KE-431C, KE-432C)

◎表中☆の部品は、BAS-311Fプログラム式電子ミシンと共通です。
◎In the following table, parts marked with ☆ are common with the BAS-311F.

品名 Part name / 仕様 Spec.	KE-431C -2	KE-431C -3	KE-432C —	
(Z1-17) ミシン針組 Needle assy	SA1752-014		SA1752-014	
(B1-26) 針 Needle	DP×5 <#14> 107415-014		DP×5 <#14> 107415-014	
(C3-37) 押え腕組 Work clamp arm assy	431-S S51848-101	431-L S51851-101	(C4-37) 押え腕組 Work clamp arm assy	S41024-100
(C3-37-10) 押え足 Work clamp, U	431-S 154416-201	431-L 154417-201	—	—
(C3-100, C4-100) 送り板 Feed plate	431-S S51853-001	431-L S51852-001	(C4-100) 送り板 Feed plate	432 S51084-001

◎標準の押え足、送り板のサイズは、次のとおりです。(実際の縫製エリアは、内枠寸法から約1.5mm内側になります。)
◎Standard sizes for work clamps and feed plates are as follows:
(The actual sewing area has 1.5mm margin on every size; inside the lines which the dimensions indicate.)

機種 / Model	KE-431C		KE-432C
仕様 / Spec.	-2	-3	-
R	154416-201	154417-201	118249-001
L			118250-001
(C3-37-10, C4-37-29 -30) 押え足 Work clamp	16, 3	27, 3	(C4-37-29, C4-37-30) 押え足 Work clamp 10, 5
(C3-100, C4-100) 送り板 Feed plate	S51853-001 1, 0.2, 17, 3	S51852-001 1, 0.2, 28, 3	S51084-001 (C3-100, C4-100) 送り板 Feed plate 33, 21, 21

118-V31-Sp2

Ga1 . ゲージ部品一覧表 (KE-430C) / Gauge parts List (KE-430C)

<ゲージ部品>
オプションのゲージ部品には次のものがあります。
押え足（押え）と送り板は、上下の組合わせになります。

・押え足と送り板 (KE430C用)

< Gauge parts >
The following are provided as optional gauge parts.
Each work clamp pair and presser pair are used in combination with the feed plate directly below them.

・Work clamps and feed plate (For KE-430C)

	1	2	3	4
(C2-37) 押え腕組 Work clamp arm assy	S49594-301 (被服 / For ordinary materials)	S49591-301 (デニム / For denim)	S49598-301 (デニム AM / For denim AM)	S49597-301 (デニム B / For denim B)
R	152777-001 < PM > (被服 / For ordinary materials)	153608-101 (デニム / For denim)	153201-001 < PL > (デニム / For denim)	152781-001 (デニム / For denim)
L	152778-001 < PM > (被服 / For ordinary materials)	154527-001 (デニム / For denim)	153202-001 < PL > (デニム / For denim)	152782-001 (デニム / For denim)
(C2-37-8, 37-9) 押え足 Work clamp	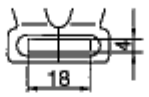	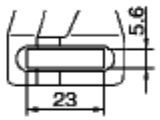	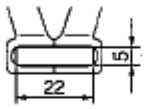	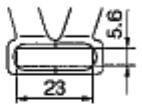
(C2-100) 送り板 Feed plate	S49698-001 < L > 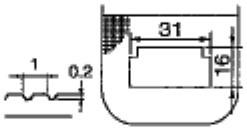	S49697-001 (デニム / For denim) 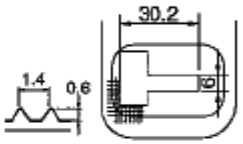	S49943-001 < PL > 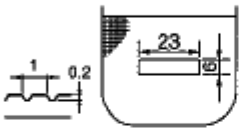	S49942-001 (デニム / For denim) 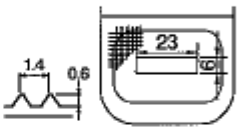

	5	6	7	8
(C2-37) 押え腕組 Work clamp arm assy	S49596-301 (メリヤス / For knitted materials)	S49598-301 (デニム AM / For denim AM)	S51095-301 < F >	S49594-301 (被服 / For ordinary materials)
R	152779-001 (メリヤス / For knitted materials)	153201-001 < PL > (デニム / For denim)	S49694-001	152777-001 < PM > (被服 / For ordinary materials)
L	152780-001 (メリヤス / For knitted materials)	153202-001 < PL > (デニム / For denim)	S49695-001	152778-001 < PM > (被服 / For ordinary materials)
(C2-37-8, 37-9) 押え足 Work clamp	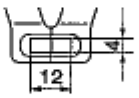	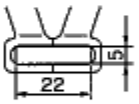	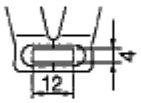	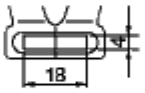
(C2-100) 送り板 Feed plate	S49700-001 < S > 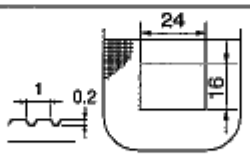	S49949-001 (デニム / For denim) 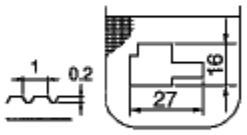	S49696-001 < F > 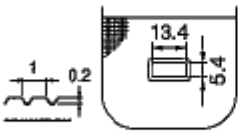	S49943-001 (PL) 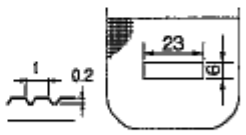

	9
(C2-37) 押え腕組 Work clamp arm assy	S49596-301 (メリヤス / For knitted materials)
R	152779-001 (メリヤス / For knitted materials)
L	152780-001 (メリヤス / For knitted materials)
(C2-37-8, 37-9) 押え足 Work clamp	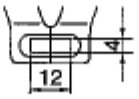
(C2-100) 送り板 Feed plate	S49699-001 (メリヤス / For knitted materials) 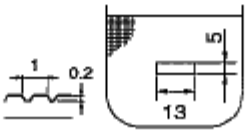

Ga1 . ゲージ部品一覧表 (KE-430C) / Gauge parts List (KE-430C)

	10	11	12
R	153203-001 < PS >	S00906-001 (25.4mm)	S33747-001 (30mm)
L	153204-001 < PS >	S00907-001 (25.4mm)	S33748-001 (30mm)
(C2-37-8, 37-9) 押え足 Work clamp	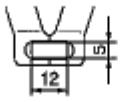	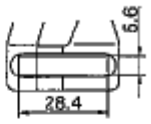	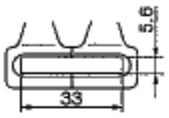
(C2-100) 送り板 Feed plate	S49944-001 < PS >	S49946-001 (25.4mm)	S49948-001 (30mm)
	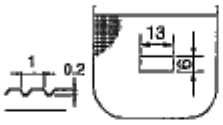	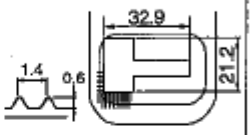	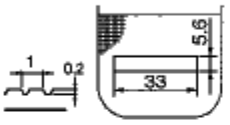

	13	
(C2-37) 押え旋組 Work clamp arm assy	S59903-001(AW / 30X26mm用)	
	S59909-001(W / 30X26mm用)	
(C2-37-8, 37-9) 押え足 Work clamp		
(C2-212) 押えブランク Work clamp blank	(C2-212) 穴ボルト 4.37x5 Bolt, socket SM 4.37x5	
155994-000 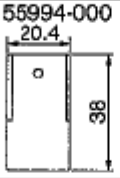	155994-000	
(C2) 送り板ブランク/ Feed plate blank		
S49976-100	S49977-100	
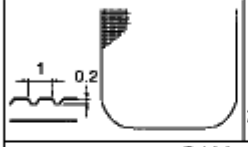	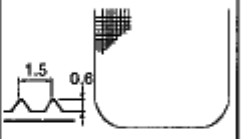	
S49978-100		
菱目無し / Without lozenge		

	14	15	16	17
R	S46771-001 (線閂止 / For straight bar tacking)	S46771-001 (線閂・沈 / For straight bar tacking/submerged)	—	—
L	S46770-001 (線閂止 / For straight bar tacking)	S46770-001 (線閂・沈 / For straight bar tacking/submerged)	—	—
(C2-37-8, 37-9) 押え足 Work clamp	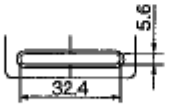	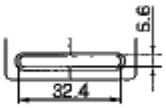	—	—
(C2-100) 送り板 Feed plate	S49970-001 (線閂止 / For straight bar tacking)	S49974-001 (線閂・沈 / For straight bar tacking/submerged)	S49941-001 < PM >	S49945-001 < MS >
	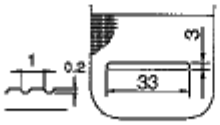	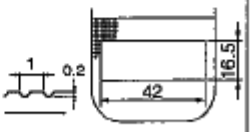	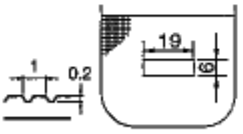	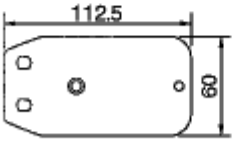

Ga1 . ゲージ部品一覧表 (KE-430C) / Gauge parts List (KE-430C)

	18	19	20	21
R	S46774-001 (縦閂止 / For vertical bar tacking)	S46774-001 (縦閂・沈 / For vertical bar tacking/submerged)	S46777-001 (菊穴 / For circular stitching)	S46780-001 (半月閂 / For crescent bar tacking)
L	S46773-001 (縦閂止 / For vertical bar tacking)	S46773-001 (縦閂・沈 / For vertical bar tacking/submerged)	S46776-001 (菊穴 / For circular stitching)	S46779-001 (半月閂 / For crescent bar tacking)
(C2-37-8, 37-9) 押え足 Work clamp	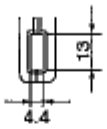	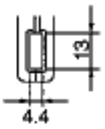		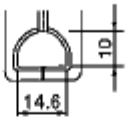
(C2-100) 送り板 Feed plate	S49971-001 (縦閂止 / For vertical bar tacking)	S49975-001 (縦閂・沈 / For vertical bar tacking/submerged)	S49972-001 (菊穴 / For circular stitching)	S49973-001 (半月閂 / For crescent bar tacking)
	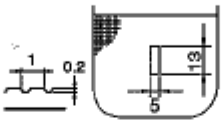	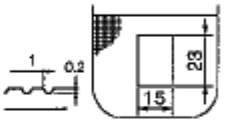	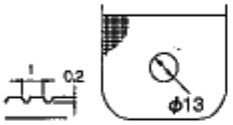	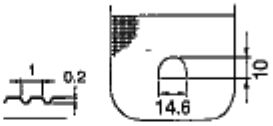
(C) 押え足 Work clamp ボルト Bolt	156006-001 / 017680-512	156006-001 / 017680-512	156006-001 / 017680-512	156006-001 / 017680-512
	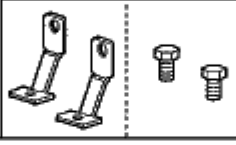	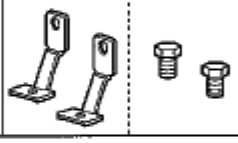	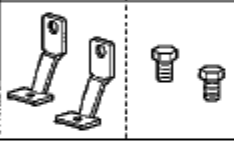	

* 20については、別にプログラム作成が必要です。
* Separate programs must be created if using 20.

Ga2 . ゲージ部品一覧表 (KE-431C) / Gauge parts List (KE-431C)

	1	2
(C3-37) 押え腕組 Work clamp arm assy	S51848-101 < S >	S51851-101 < L >
(C3-37-10) 押え足 Work clamp	154416-201 < S >	154417-201 < L >
	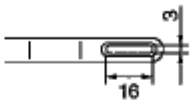	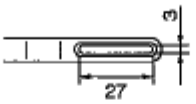
(C3-100) 送り板 Feed plate	S51853-001 < S >	S51852-001 < L >
	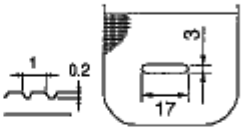	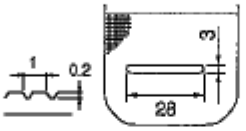

< ゲージ部品 / Gauge parts >

	3	
(C1-200) ゲージ組 Gauge assy	S42902-001 < 438E >	
	原点基準板 / Home position standard plate (C1-200-1) S42903-001 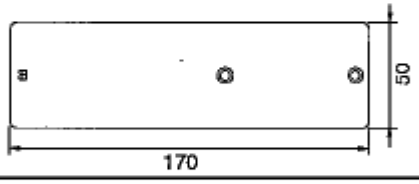	送り板締ねじ / Screw (C1-200-2) S10352-101

(J-53) 針穴板 / Needle hole plate

A	S10211-001	A-F	S51449-001	BZ	S41013-001	D	S29997-001	E	S10212-101	ED	S30925-001
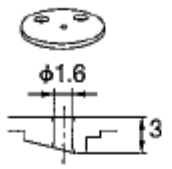 (メリヤス用標準 / For knitted materials)		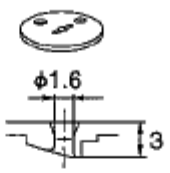		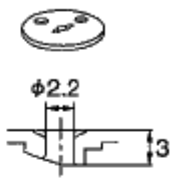		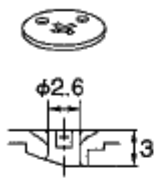		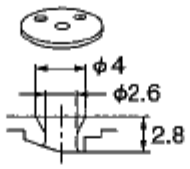 (デニム用標準 / For denim)		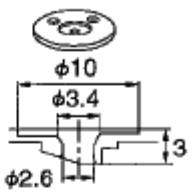	
F	S10213-001	FD	S30926-001	FM	S49980-001	FZ	S59620-001	H	S30450-001	L	S25127-001
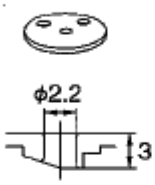		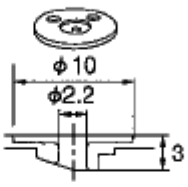		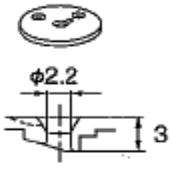 (被服用標準 / For ordinary materials)		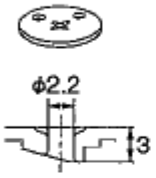		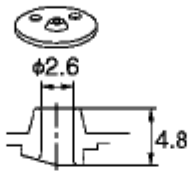		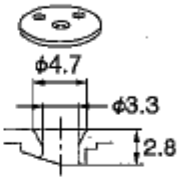	
M	S34348-001	3ザグリ	S40217-001								
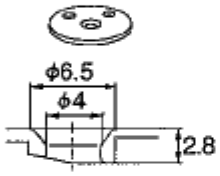		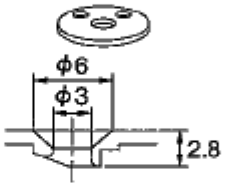									

◎ 標準の針穴板は、次のとおりです。
◎ Standard needle hole plates are as follows.

機種 / Model	KE-430C					
仕様 / Spec.	-2		-1		-7	
	E	S10212-101	FM	S49980-001	A	S10211-001
針穴板 Needle hole plate	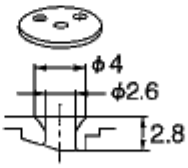		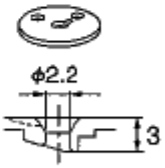		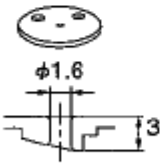	

機種 / Model	KE-431C				KE-432C	
仕様 / Spec.	-2		-3		-	
	FM	S49980-001	FM	S49980-001	FM	S49980-001
針穴板 Needle hole plate	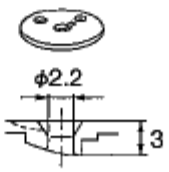		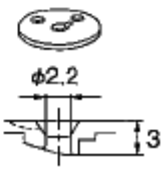		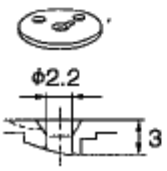	

警告ラベル / Warning labels	品名 / Name of parts	Size(mm)	Code
	電撃ラベル・和	40×64	S38353-101
	Label, elec. shock 4 lang.	45×118	S38352-101
	操作注意ラベル・和	40×64	S38350-001
	Label, operation Eng.	40×64	S38349-001
PE	PE マーク Label, PE	7.5×12.5	S37059-001
	アースマーク Label, grounding	φ 12	S37060-001

CODE	REF.NO	page
004400603	U1-1-1-1-5	56
	U2-1-2-1-3	58
008400604	Q1-1-22	42
	V-20-5-10	62
	V-20-5-12	62
011679312	A-101	2
014060632	Z2-35-2-16-1	69
014680622	C4-205	14
	E-3	22
	H-1-9	30
	J-8-2	32
014710522	K-14	36
014760622	C1-1-8	8
	C1-4-4	8
	C1-6	8
	C1-10	8
	C1-13	8
	C1-21	8
	C1-30	8
	C2-37-7	10
	C2-37-24	10
	C3-37-6	12
	C3-37-20	12
	D1-13	18
	D2-13	20
	D2-38	20
	E-7	22
	E-10	22
	E-15	22
	J-33	32
	K-5	36
	Z1-10	64
014760632	G-28	28
014770622	C3-37-9	12
	E-13-1	22
	J-2	32
	J-23	32
014770632	B1-14	4
014780622	B1-5	4
	B1-17	4
017082206	U3-2-4-5	60
017680512	A-15	2
	B2-49	6
	Z1-912	66
	Ga1-211	75
017761212	C4-42	14
017761412	C2-42	10
	C3-42	12
017781412	C4-206	16
017821813	D2-39	20
018061022	B2-41	6
	C4-37-33	14
018061436	Q2-4	48
018061622	D2-34	20
018062036	C4-221	16
018062522	B2-42	6
018082536	U1-1-1-4	56
	U2-1-2-4	58
018083022	B2-37	6
018400632	V-20-8	62
018400822	C2-47	10
	C3-47	12
018401222	R-3	50

CODE	REF.NO	page
018401236	B2-30-4	6
	U1-1-1-10	56
	U2-1-2-10	58
018401622	C4-37-9	14
018405032	Z1-920	66
018500822	C2-37-15	10
	C3-37-8	12
	C3-37-13	12
018501022	C2-500-5	10
018501036	U1-1-1-7	56
	U2-1-2-7	58
018501232	E-20	22
018501422	D1-26	18
	D2-26	20
018680252	Ga1	75
021060102	B2-43	6
021060106	Q2-6	48
	Z1-56	64
021060306	C4-223	16
021300206	U3-2-1-10	60
021400102	C4-37-13	14
	Z1-921	66
021400106	Q2-52	48
	R-40-10	52
021400206	Q1-1-6	42
021500106	Z2-35-1-8-3	68
	Z2-35-1-11-1	68
	Z2-35-2-10-3	69
	Z2-35-2-15-1	69
	Z2-35-2-16-2	69
021660102	Z2-67-1-1-4	68
	Z2-67-2-1-5	69
021670102	L-10	36
021670202	V-20-4	62
021680202	C4-37-7	14
	H-1-24	30
021710212	C4-37-18	14
025030236	U3-2-1-9	60
025040236	Q2-51	48
	U1-1-1-1-15	56
	U1-1-1-12	56
	U2-1-2-1-14	58
	U2-1-2-12	58
025050232	C2-500-7	10
	R-202	52
025050236	U1-1-1-9	56
	U2-1-2-9	58
025060232	C2-41	10
	C3-41	12
	C4-37-32	14
	C4-41	14
	D2-35	20
025060236	Q2-5	48
025060336	Z1-57	64
025080132	A-35	2
025080232	B2-39	6
025080236	U1-1-1-6	56
	U2-1-2-6	58
	U3-2-1-4	60
	U3-2-4-8	60
025350132	K-17	36
025350332	L-16	36
025660132	Z2-67-2-1-4	69

CODE	REF.NO	page
025680132	N-7	40
025680232	F-8	26
	H-1-27	30
	H-4	30
025710132	C4-37-24	14
	C4-37-34	14
025710232	C4-37-10	14
	C4-37-16	14
	C4-213	16
	C4-231	16
025770232	E-27	22
	K-3	36
026030232	Z2-67-1-1-5	68
026040236	R-40-8	52
026050136	Z2-35-1-11-5	68
	Z2-35-2-15-5	69
028040246	B2-30-5	6
	U1-1-1-11	56
	U2-1-2-11	58
028050242	C2-500-6	10
028050246	U1-1-1-8	56
028050246	U2-1-2-8	58
	Z2-35-1-8-2	68
	Z2-35-2-10-2	69
	Q2-7	48
028060240	U3-2-4-7	60
028080242	B2-38	6
028080246	U1-1-1-5	56
	U2-1-2-5	58
028350242	L-15	36
	M-5-6	38
028680242	F-9	26
	J-22-6	32
031412506	Z1-61	64
032422003	Z1-71	64
032461606	Z1-58	64
037301215	Z1-4-3	64
047401442	L-6	36
048030342	K-12	36
	C4-37-17	14
	K-4	36
	L-19	36
	M-15	38
	C2-37-6	10
	H-1-10	30
048050346	U1-1-1-1-13	56
	U2-1-2-1-12	58
048060342	C1-15	8
	C1-23	8
	J-32	32
	K-9	36
048070342	E-18	22
	J-19	32
048100142	H-1-4	30
048150142	B1-9	4
	D2-28	20
048180142	C1-8	8
052400606	U1-1-1-1-14	56
	U2-1-2-1-13	58
052400806	U3-2-1-11	60
060300512	C1-34	8
060400616	R-37	50
060501016	D1-22	18

CODE	REF.NO	page
060501016	D2-22	20
	R-15	50
060670512	F-16	26
	A-18	2
	G-4	28
	G-6	28
	R-20	50
	R-35	50
	R-36	50
	R-33	52
	V-20-15	62
060680512	C2-53	10
	C3-53	12
	C4-53	14
060680712	D1-24	18
	D2-24	20
060681212	D1-20	18
	D2-20	20
	J-5	32
061350616	V-20-11	62
061660806	Z2-67-1-1-3	68
062020806	R-40-4	52
062300612	R-204	52
	V-20-5-2	62
062300806	R-8	50
	R-9	50
	S-1-2	54
062300812	R-206	52
062301205	U2-1-2-1-6	58
062302506	U1-1-1-1-8	56
062400616	R-40-6	52
062400806	N-2	40
062401006	Z1-76	66
062401216	R-40-7	52
062501212	R-201	52
062501406	Z2-35-1-11-2	68
	Z2-35-1-11-4	68
	Z2-35-2-15-2	69
	Z2-35-2-15-4	69
062660412	E-14-1-3	22
	E-14-2-1-3	22
062660712	E-14-1-7	22
	E-14-2-1-7	22
	Z2-67-2-1-3	69
062670412	G-31	28
062670512	F-28	26
	F-39	26
	F-52	26
	K-16	36
	R-13	50
	Z2-67-1-1-7	68
062670612	G-2	28
	G-24	28
	L-21	36
	R-24	50
062671012	C2-37-22	10
	L-14	36
062671016	Z2-67-1-2	68
	Z2-67-2-2	69
062671212	C3-37-1-3	12
062680512	H-1-18	30
062680612	C1-36	8
	C4-218	16

CODE	REF.NO	page
062680612	D1-16	18
	D2-16	20
	F-7	26
	F-31	26
	H-3	30
062680812	B1-16-8	4
	M-9	38
	V-20-12	62
062681012	A-26	2
	C1-18	8
	C1-26	8
062681212	C4-37-25	14
	H-2	30
062681412	N-6	40
062710812	C4-211	16
	C4-219	16
	C4-230	16
	L-2	36
	R-31	52
062711012	A-42	2
	C4-212	16
062761012	C4-37-20	14
070688850	C1-16	8
	C1-24	8
071039750	C2-48	10
	C3-48	12
071047650	C2-40	10
	C3-40	12
	C4-40	14
072630260	B1-7	4
081003670	E-12	22
	E-17	22
087310815	S-1-1-5	54
087311015	S-1-1-9	54
091170009	P-1-5	40
093650008	P-1-3	40
093650032	P-1-4	40
0A4301005	P-1-13	40
	Q1-1-26-17	42
0A4400605	Q2-42	48
0A4400805	S-1-1-6	54
0A5400606	Q1-1-9	42
	R-17	50
0A5401006	R-5	50
	R-11	50
	R-41	52
	R-43	52
0A5401206	Q1-1-5	42
	Q1-1-10	42
0A5401606	Q2-50	48
0A5403006	Q1-1-8	42
100022004	H-1-26	30
100022005	J-25	32
	J-26-3	32
	M-1-3	38
	M-4	38
100032004	J-51	34
100090004	E-2	22
100136001	G-20	28
	H-1-20	30
100242003	B1-20	4
100250001	B1-13	4
100281001	D1-8	18

CODE	REF.NO	page
100281001	D2-8	20
100360003	J-54	34
100402004	G-17	28
	H-1-7	30
100645003	A-34	2
	V-20-9	62
100666002	U3-2-2	60
100887001	Z1-30	64
101268002	U3-2-1-5	60
101572101	Z1-28	64
101706001	C1-3-2	8
	E-6-1	22
102630001	B1-18	4
103810002	E-26	22
104449001	A-11	2
	V-20-17	62
104450101	A-4	2
	A-10	2
104525001	G-14-1	28
	Sp1-G-14	70
	Sp1-G-14	70
	Sp1-G-14	70
	Sp2-G-14	72
	Sp2-G-14	72
	Sp2-G-14	72
104567101	F-22	26
104821001	A-30	2
105234003	D2-32	20
105812003	J-15	32
106129002	M-5-5	38
106629002	A-14	2
107038003	C2-37-12	10
107149001	F-5	26
	F-13	26
107321003	L-4	36
107415009	Sp1-B1-26	71
107415014	Sp1-B1-26	71
	Sp1-B1-26	71
	Sp2-B1-26	73
	Sp2-B1-26	73
	Sp2-B1-26	73
107606001	G-14-2	28
	Sp1-G-14	70
107744001	D2-30	20
107779001	Z1-29	64
107780001	Z1-31	64
108802001	C1-1-5	8
109239002	A-24	2
109714000	Z1-5	64
	Z1-12	64
109714000	Z1-21	64
110161004	J-37	32
110233001	J-36	32
110251001	L-9	36
110367001	J-31	32
111140002	J-50	34
114294001	G-9	28
114483002	Z1-22	64
114486002	Z1-6	64
115007001	V-20-5-13	62
115147001	C4-201	14
115186001	G-19	28
115188001	G-21	28

CODE	REF.NO	page
116629001	C2-37-5	10
	K-10	36
116694001	U3-2-4-6	60
116920001	B1-8	4
116922001	G-12	28
117143001	C4-37-27	14
117150001	R-23	50
117934001	A-6	2
	A-17-3	2
117936001	U1-1-1-1-16	56
	U2-1-2-1-15	58
118064001	Z1-34	64
118244001	C4-37-28	14
118247001	C4-37-11	14
	C4-37-26	14
118248101	C4-37-21	14
118249001	C4-37-29	14
	Sp2-C4-37-29	73
	Sp2-C4-37-29	73
118250001	C4-37-30	14
	Sp2-C4-37-30	73
118252001	C4-37-23	14
118256001	C4-37-4	14
118257001	C4-37-5	14
118258001	C4-37-3	14
118259001	C4-37-6	14
118735002	C4-207	16
	C4-222	16
118837001	Z1-27	64
119707003	U3-2-4-3	60
119708001	U3-2-4-4	60
120448001	D2-25	20
	H-1-13	30
120990001	H-1-14	30
121007001	J-42	32
122991001	Z1-14	64
123882001	C4-37-36	14
	E-25	22
133188001	U3-2-4-2	60
133740006	Z1-55	64
138843001	Z2-35-2-12	69
140392009	A-5	2
	A-7	2
140407001	C4-226	16
140407002	C3-37-7	12
	C3-37-12	12
140647101	R-40-5	52
140726000	B1-6	4
141492001	J-26-2	32
	M-1-2	38
141590001	H-1-25	30
141786001	E-1	22
142443001	Z1-26	64
142656001	U3-2-5	60
142721001	Z1-33	64
142990001	Z2-35-1-10-3	68
	Z2-35-2-14-3	69
142997001	Z2-35-2-6	68
143882001	Z1-9	64
144105000	H-1-23	30
144110001	H-1-21	30
144226001	Z1-51	64
144458001	B1-23	4

CODE	REF.NO	page
144588001	Sp1-G-10	70
144712001	B1-2-1	4
145318001	C2-32	10
	C4-32	14
145446001	G-16	28
	G-22	28
	H-1-22	30
145465001	B1-16-5	4
145478101	C2-37-17	10
	C3-37-15	12
	M-2	38
145519001	Sp1-G-10	70
	Sp1-G-10	70
	Sp1-G-10	70
	Sp2-G-10	72
	Sp2-G-10	72
	Sp2-G-10	72
145547001	F-27	26
145992001	K-8	36
146354001	C2-37-14	10
146994001	C4-202	14
147777000	B1-16-9	4
148738000	F-4	26
	F-40	26
	F-41	26
148847001	J-13	32
148904001	U3-2-1-3	60
149287000	R-32	52
	V-20-16	62
149809000	Q2-45	48
	Q2-48	48
150173003	Z2-35-1-7	68
	Z2-35-2-9	68
150174000	Z2-35-1-4-3	68
	Z2-35-1-5-1	68
	Z2-35-2-7-1	68
150179002	Z2-35-1-8-1	68
150179002	Z2-35-2-10-1	69
150182000	Z2-35-1-2	68
	Z2-35-2-2	68
150183000	Z2-35-1-10-2	68
	Z2-35-2-14-2	69
150185009	Z2-35-2-11	69
150206002	D2-27	20
	Z2-35-1-4-1	68
	Z2-35-2-4-1	68
150553001	C4-37-2	14
150556001	C4-208	16
150592001	A-29	2
151602002	C1-1-3	8
152240101	B1-22	4
152242001	B1-24	4
152243001	B1-25	4
152245101	E-4	22
152678201	E-11	22
	E-16	22
152682101	Sp1-E-21	70
	Sp1-E-21	70
	Sp1-E-21	70
	Sp2-E-21	72
	Sp2-E-21	72
	Sp2-E-21	72
152683101	E-14-1-4	22

CODE	REF.NO	page
152683101	E-14-2-1-4	22
152684101	E-14-1-5	22
	E-14-2-1-5	22
152686101	Sp1-E-21	70
152690401	Sp1-E24	70
152756001	C1-9	8
152760051	C1-7	8
152771000	C2-38-1	10
	C3-38-1	12
	C4-38-1	14
152777001	Sp1-C2-37-8	71
	Sp1-C2-37-8	71
	Ga1-C2-37-8	74
	Ga1-C2-37-8	74
152778001	Ga1-C2-37-9	74
	Ga1-C2-37-9	74
152779001	Ga1-C2-37-8	74
	Ga1-C2-37-8	74
152780001	Ga1-C2-37-9	74
	Ga1-C2-37-9	74
152781001	Ga1-C2-37-8	74
152782001	Ga1-C2-37-9	74
152783001	C2-37-10	10
152784001	C2-37-11	10
152788000	C2-37-19	10
	C3-37-17	12
152822101	K-2	36
152823001	K-11	36
152827001	C4-214	16
	K-13	36
152842059	A-22-1	2
152869001	G-1	28
152872001	G-8	28
152881001	G-27	28
152883000	G-29	28
152884001	G-30	28
152889001	G-23	28
152890001	G-25-1	28
	Sp1-G-25	71
152891101	G-26	28
152948001	F-33	26
152956001	F-42	26
152969001	F-38	26
	R-12	50
153035000	C2-45	10
	C3-45	12
	C4-45	14
153057101	C2-44	10
	C3-44	12
	C4-44	14
153112001	V-20-3	62
	Ga1-C2-37-8	74
	Ga1-C2-37-8	74
153202001	Ga1-C2-37-9	74
	Ga1-C2-37-9	74
153203001	Ga1-C2-37-8	75
153204001	Ga1-C2-37-9	75
153242000	Q1-1-26-14	42
	Z1-102	66
153484001	D2-31	20
153567000	C2-37-20	10
	C3-37-18	12
153569001	C3-37-16	12

CODE	REF.NO	page
153570101	C2-37-16	10
153596001	J-20	32
153597001	M-5-2	38
153608101	Sp1-C2-37-8	71
	Sp1-C2-37-8	71
	Ga1-C2-37-8	74
153827001	C4-204	14
153828001	D2-29	20
153834101	C4-203	14
153838001	D2-37	20
153924001	C1-1-4	8
	F-45	26
153944001	C3-37-5	12
154339101	Sp1-E-24-1	70
	Sp1-E-24-1	70
	Sp1-E-24-1	70
	Sp2-E-24-1	72
	Sp2-E-24-1	72
	Sp2-E24	72
	Sp2-E-24-1	72
154340101	Sp1-E-24-1	70
154341001	Sp1-E-24-2	70
	Sp1-E-24-2	70
	Sp1-E-24-2	70
	Sp1-E-24-2	70
	Sp2-E-24-2	72
	Sp2-E-24-2	72
	Sp2-E-24-2	72
154342001	Sp1-E-24-3	70
154413001	C3-37-2	12
154415001	C3-37-4	12
154416201	Sp2-C3-37-10	73
154416201	Sp2-C3-37-10	73
	Ga2-C3-37-10	77
154417201	Sp2-C3-37-10	73
	Sp2-C3-37-10	73
	Ga2-C3-37-10	77
154467001	Z1-4-2	64
154514001	R-40-9	52
154527001	Sp1-C2-37-9	71
	Sp1-C2-37-9	71
	Ga1-C2-37-9	74
154528001	H-1-12	30
154596000	J-21	32
154599000	J-6	32
155559001	L-18	36
155562101	C4-37-8	14
155567001	C4-200	14
155576001	C4-37-14	14
155577001	C4-37-15	14
155578000	B1-21	4
155994000	Ga1-C2-212	75
156006001	Z1-911	66
	Ga1-210	75
156112003	Z2-35-1-6	68
	Z2-35-2-8	68
156170001	C4-37-12	14
156206001	V-20-13	62
	K-15	36
156495201	C2-37-21	10
157968001	H-1-17	30
159565000	F-23	26
159574101	H-1-19	30

CODE	REF.NO	page
159610301	Sp1-E24	70
	Sp1-E24	70
	Sp1-E24	70
	Sp2-E24	72
	Sp2-E24	72
	Sp2-E24	72
159612001	Sp1-E-24-3	70
159612001	Sp1-E-24-3	70
	Sp1-E-24-3	70
	Sp2-E-24-3	72
	Sp2-E-24-3	72
	Sp2-E-24-3	72
159613051	Sp1-E-25	70
	Sp1-E-25	70
	Sp1-E-25	70
	Sp1-E-25	70
	Sp2-E-25	72
	Sp2-E-25	72
	Sp2-E-25	72
159805001	G-15	28
159825200	C3-37-1-1	12
159827001	C3-37-1-2	12
159828101	C3-37-14	12
159905001	J-14	32
181995001	E-6	22
183493001	C1-3	8
200190001	U3-2-3	60
	Z1-42	64
	Z1-62	64
218859001	Q2-2-1-5	46
	Q2-2-2-5	46
	Q2-2-3-5	46
	Q2-2-4-5	46
	Q2-2-7-5	46
	R-25	50
224514001	Q2-2-1-4	46
	Q2-2-2-4	46
	Q2-2-3-4	46
	Q2-2-4-4	46
	Q2-2-7-4	46
228475000	C4-216	16
	F-44	26
	J-55	34
	Q1-12	42
228475000	R-22	50
	U2-1-2-1-7	58
231071001	J-17	32
232384001	Q1-1-26-6	42
402887001	E-14-1-6	22
402887001	E-14-2-1-6	22
525664000	C4-217	16
552907000	R-4	50
	R-10	50
	R-42	52
J02657001	Q2-2-1-3	46
	Q2-2-2-3	46
	Q2-2-3-3	46
	Q2-2-4-3	46
	Q2-2-7-3	46
J80868001	T-1	54
S00480000	R-19	50
	R-34	50
	U3-2-1-12	60

CODE	REF.NO	page
S00554000	Q1-1-17	42
S00705001	J-47	34
S00906001	Ga1-C2-37-8	75
S00907001	Ga1-C2-37-9	75
S01005000	Z2-35-1-4-4	68
S01199003	U3-2-4-1	60
S01603009	U3-2-4	60
S01998001	L-8	36
S01998001	M-13	38
S02354001	J-24	32
	M-3	38
S02429101	E-14-1-2	22
	E-14-2-1-2	22
S02652001	J-7	32
S02654001	J-8-1	32
S02747101	Z2-35-1-4-5	68
S02763402	Z2-35-1	68
S02775001	Z2-35-2-4	68
S02777001	Z2-35-1-4	68
S02778002	Z2-35-1-9	68
	Z2-35-2-13	69
S02786002	Z2-35-1-10	68
	Z2-35-2-14	69
S02787002	Z2-35-1-10-1	68
	Z2-35-2-14-1	69
S04109001	Z2-35-2-5	68
S06533001	C4-37-31	14
S06706001	Z1-15	66
S07333001	F-2	26
S07456000	F-3	26
S08030000	Q1-1-26-15	42
	Z1-101	66
S08170001	Z1-24	64
S09043000	E-14-1-8	22
	E-14-2-1-8	22
	F-32	26
S09212001	C1-3-1	8
S10105001	D1-14	18
	D2-14	20
S10162201	F-15	26
S10174000	H-1-15	30
S10195101	J-30	32
S10202201	J-41	32
S10208001	J-46	32
	Z1-18	64
	J-46	32
	Z1-18	64
S10208003	J-46	32
	Z1-18	64
S10209101	C2-51	10
	C3-51	12
	C4-51	14
	J-48	34
S10210201	J-49	34
S10211001	Sp1-J-53	70
	Ga3-J-53	78
S10212101	Sp1-J-53	70
	Ga3-J-53	78
S10213001	Ga3-J-53	78
S10239001	M-22	38
S10243000	R-205	52
S10352101	Ga2-C1-200-2	77
S10469001	G-18	28

CODE	REF.NO	page
S10478000	F-10	26
S11244001	J-52	34
S11949000	Q1-1-16	42
S12441001	G-33	28
S12699000	G-11	28
S15665001	Sp1-E-25	70
	Sp1-E-25	70
	Sp1-E-25	70
	Sp2-E-25	72
	Sp2-E-25	72
	Sp2-E-25	72
S15667001	Sp1-E-24-3	70
	Sp1-E-24-3	70
	Sp1-E-24-3	70
	Sp2-E-24-3	72
	Sp2-E-24-3	72
	Sp2-E-24-3	72
S16290001	E-21	22
S16492101	Sp1-E-24-2	70
	Sp1-E-24-2	70
	Sp1-E-24-2	70
	Sp2-E-24-2	72
	Sp2-E-24-2	72
	Sp2-E-24-2	72
S18093100	F-26	26
	Z1-4-4	64
S18523001	C4-228	16
S19662001	C4-227	16
	D1-10	18
	D2-10	20
S19746001	L-5	36
S19748001	L-12	36
	M-8	38
S20164001	A-28	2
S21796001	Z2-35-1-8	68
	Z2-35-2-10	69
S23337001	A-16	2
	C1-49	8
	C4-215	16
S23836001	J-8	32
S25127001	Ga3-J-53	78
S25456001	V-20-5-5	62
	V-20-7	62
S29019000	P-1-1	40
S29023000	S-1-1-7-2	54
S29997001	Ga3-J-53	78
S30033001	M-5-3	38
S30280000	S-1-1-7-6	54
S30450001	Ga3-J-53	78
S30925001	Ga3-J-53	78
S30926001	Ga3-J-53	78
S31006001	M-18	38
S31032001	G-13	28
S31760000	Q1-1-18	42
S31952001	M-21	38
S32335000	V-20-5-7-1	62
S32235001	J-18	32
S32335100	R-30-2-1	50
S33006001	Z1-52	64
S33747001	Ga1-C2-37-8	75
S33748001	Ga1-C2-37-9	75
S33749001	Ga1-C2-190	76
S34839001	C2-37-4	10

CODE	REF.NO	page
S34883001	L-11	36
S34986000	F-11	26
S35352101	Wa	79
S36048000	R-203	52
S36260000	U1-1-1-1-7-2	56
	U2-1-2-1-5-2	58
S36682000	U1-1-1-1-18	56
S36685101	Z2-67-2-1	69
S36686101	Z2-67-2-1-1	69
S37057001	R-30-1	50
	V-20-5-8	62
S37059001	Q1-1-24	42
	Wa	79
S37060001	Q1-1-25	42
	Wa	79
S37806109	V-20-5-11	62
S37915009	A-12	2
S37926101	B1-16-7	4
S37928019	Sp1-B1-26	71
S37930201	C1-1	8
S37931101	C1-1-1	8
S37932101	C1-1-6	8
	C1-4-2	8
S37933001	C1-1-7	8
	C1-4-3	8
S37934001	C1-2	8
S37937001	C1-11	8
	C1-19	8
S37938001	C1-12	8
S37939001	C1-14	8
	C1-22	8
S37940001	C1-17	8
	C1-25	8
S37941001	C1-20	8
S37942100	C1-27	8
S37943100	C1-28	8
S37944000	C1-29	8
S37949101	C2-37-2	10
S37950101	C2-37-3	10
S37951101	C2-37-13	10
	C3-37-11	12
S37956001	Ga1-C2-190	76
S37968001	D1-9	18
	D2-9	20
S37978251	E-5	22
S37983001	F-6	26
S37985000	F-24	26
S37986000	F-25	26
S37987001	F-29	26
S37988000	F-30	26
S37991109	H-1-1	30
S37992100	H-1-2	30
S37993000	H-1-3	30
S37994001	H-1-5	30
S37995101	H-1-6	30
S37996001	H-1-8	30
S37997001	H-1-11	30
S37998001	H-1-16	30
S38002201	J-3	32
S38003101	J-9	32
S38004002	J-11	32
S38004003	J-11	32
S38004004	J-11	32

CODE	REF.NO	page
S38011001	J-34	32
S38012001	J-40	32
S38015001	J-43-1	32
S38016001	J-44	32
S38024001	K-6	36
S38025001	K-7	36
S38032001	M-11	38
S38033001	M-14	38
S38039209	Z1-4	64
S38040209	Z1-4-1	64
S38044001	Z1-59	64
S38045109	Z1-19	64
S38060000	U2-1-2-1-17	58
S38080001	N-4	40
S38082001	N-5	40
S38093000	Q1-1-4	42
S38107100	Q1-1-12	42
S38108000	Q1-1-13	42
S38109100	Q1-1-14	42
S38110000	Q1-1-15	42
S38112001	Q2-2-1	46
S38113000	Q2-2-1-1	46
	Q2-2-4-1	46
S38114000	Q2-2-2	46
S38115000	Q2-2-2-1	46
	Q2-2-3-1	46
	Q2-2-7-1	46
S38116000	Q1-1-23	42
S38117000	Q2-2-3	46
S38118000	Q2-2-2-2	46
S38120000	Q2-2-5	46
S38123000	Q2-3-1	46
S38126000	Q2-3-2-2	46
	Q2-3-3-2	48
S38133000	Q2-2-1-2	46
	Q2-2-3-2	46
S38134100	R-1	50
S38136100	R-2	50
S38143000	Q1-11-1	42
S38144100	R-14-2	50
S38146000	R-14-3	50
S38147000	R-14-4	50
S38148000	R-16	50
S38155000	P-1-9	40
S38168001	U1-1-1-1-3	56
S38169201	U1-1-1-1-4	56
	U2-1-2-1-2	58
S38170001	U1-1-1-1-6	56
	U2-1-2-1-4	58
S38177001	U1-1-1-1-12	56
	U2-1-2-1-11	58
S38178101	U1-1-1-2	56
	U2-1-2-2	58
S38179101	U1-1-1-3	56
	U2-1-2-3	58
S38180000	U1-1-1-1-17	56
	U2-1-2-1-16	58
S38203000	Q1-1-26-4	42
S38205000	Q1-1-26-8	42
S38208000	Q1-1-26-13	42
S38349001	Z1-75-2	66
	Wa	79
S38350001	Z1-75-2	66

CODE	REF.NO	page
S38350001	Wa	79
S38352101	Q1-20	42
S38353101	Q1-21	44
	Wa	79
S38648001	Z2-35-1-4-2	68
	Z2-35-2-4-2	68
S38744101	R-40-2	52
S39051001	M-19	38
S40217001	Ga1-3	78
S40574109	Z2-35-2	68
S40616001	Q2-40-1	48
S40620000	Q2-41	48
S40621000	Q2-43	48
	Q2-46	48
S40622000	Q2-44	48
	Q2-47	48
S40623000	Q2-49	48
S40635001	Q2-40	48
S40640001	Z2-35-1-5	68
	Z2-35-2-7	68
S40641001	Z2-35-1-11	68
	Z2-35-2-15	69
S40643001	Z2-35-2-16	69
S40916001	J-43-2	32
S41009001	C4-229	16
S41010001	C4-224	16
S41011001	C4-37-35	14
S41012001	C4-225	16
S41013001	Ga3-BZ	78
S41014009	D2-33	20
S41015101	D2-11	20
S41016001	D2-36	20
S41024100	C4-37	14
	Sp2-C4-37	73
S41025100	C4-37-1	14
S41060109	C4-210	16
S41204050	V-20-5-1-1	62
S41205001	V-20-5-3	62
S41206001	V-20-5-4	62
S41207000	V-20-6	62
S41222101	G-25-2	28
	Z1-64	64
	Sp1-G-25	71
	Sp2-G-25	72
	Sp2-G-25	72
	Sp2-G-25	72
S41230001	C3-37-3	12
S41264001	C4-220	16
S41265001	C4-37-19	14
S41284301	K-11	36
S41288001	C4-37-22	14
S41290301	C4-209	16
S41324001	C2-500-1	10
S41325001	C2-500-2	10
S41326101	C2-500-3	10
S41327101	C2-500-4	10
S41328101	C2-500	10
S41656001	V-20-1	62
S41657001	V-20-10	62
S42017109	V-20-5-6	62
S42018109	V-20-5-9	62
S42260000	Q1-1-11	42
S42902001	Ga2-C1-200	77

CODE	REF.NO	page
S42903001	Ga2-C1-200-1	77
S43175000	Q1-1-26-10	42
S43176000	Q1-1-26-11	42
S43177000	Q1-1-26-1	42
S43178000	P-1-2	40
S43181000	Q1-1-26-12	42
S43184000	Q1-1-26-2	42
S43187000	Q1-1-26-19	42
S43188000	Q2-2-6	46
S43189000	Q1-1-26-18	42
S43201000	Q2-3-4	48
S43275000	Q1-1-19	42
S43276000	Q1-1-20	42
S43277000	Q1-1-21	42
S44010001	A-31	2
S44483001	Z2-67-1-1-1	68
S44485001	Z2-67-1-1-2	68
S44486101	Z2-67-1-1-6	68
S44493101	Z2-67-1-1	68
S44600001	V-20-2	62
S44629001	A-920	2
S45083001	G-32	28
S45147101	B1-2	4
S46131001	U3-2	60
S46132001	U3-2-1	60
S46133001	U3-2-1-1	60
S46134001	U3-2-1-2	60
S46135001	U3-2-1-6	60
S46136000	U3-2-1-7	60
S46694000	U1-1-1-1-19	56
	U2-1-2-1-18	58
S46703000	S-1-1-7-3	54
S46734001	M-12	38
S46769001	Ga1-C2-190	76
S46770001	Ga1-C2-37-9	76
	Ga1-C2-37-9	76
S46771001	Ga1-C2-37-8	76
	Ga1-C2-37-8	76
S46772001	Ga1-C2-190	76
S46773001	Ga1-C2-37-9	76
	Ga1-C2-37-9	76
S46774001	Ga1-C2-37-8	76
	Ga1-C2-37-8	76
S46775001	Ga1-C2-190	76
S46776001	Ga1-C2-37-9	76
S46777001	Ga1-C2-37-8	76
S46778001	Ga1-C2-190	76
S46779001	Ga1-C2-37-9	76
S46780001	Ga1-C2-37-8	76
S46781001	Ga1-C2-190	76
S46782001	Ga1-C2-190	76
S47091001	B1-16-3	4
S47270001	B2-44	6
S47335101	H-5	30
S47592000	Q2-2-4	46
S47594000	Q2-2-7	46
S47595000	Q2-2-4-2	46
	Q2-2-7-2	46
S47692000	Q1-1-7	42
S48578000	P-1-14	40
S48579000	S-1-1-7-4	54
S48580000	Q1-1-26-16	42
	Z1-103	66

CODE	REF.NO	page
S48581100	R-6	50
S48582000	R-6-4	50
S48583001	R-200	52
S48646001	C2-37-18	10
S48664001	Sp1-E-24-1	70
	Sp1-E-24-1	70
	Sp1-E-24-1	70
	Sp2-E-24-1	72
	Sp2-E-24-1	72
	Sp2-E-24-1	72
S48666001	N-1	40
S49071000	Q1-1-26-7	42
S49443000	U3-3	60
S49463100	R-6	50
S49464000	R-18	50
S49465001	R-21	50
S49465002	R-21	50
S49465009	R-21	50
S49466000	R-30-2-2	52
	V-20-5-7-2	62
S49467001	Q1-1	42
S49468001	Q1-1-1	42
S49469001	Q1-1-2	42
S49470001	Q1-1-3	42
S49471000	P-1-8	40
S49472000	Q1-1-26-20	42
S49473000	Q2-3-2	46
S49474000	Q2-3-2-1	46
S49475000	Q2-3-3	48
S49476000	Q2-3-3-1	48
S49477000	Q1-10	42
S49479001	P-1	40
S49482000	R-30-2	50
	V-20-5-7	62
S49484000	P-1-6	40
S49485000	P-1-7	40
S49486000	P-1-11	40
S49495000	S-1-1-3	54
S49496001	S-1-1-4	54
S49497001	S-1-1-7-1	54
S49510000	S-1-1-8	54
S49582001	B1-3	4
S49583001	B1-4	4
S49584000	B1-12	4
S49585001	B1-16	4
S49586000	Q1-1-26-3	42
S49587001	B1-16-1	4
S49588001	B1-16-2	4
S49589001	B1-16-4	4
S49590001	C1-33	8
S49591301	Sp1-C2-37	71
	Ga1-C2-37	74
S49592200	C2-37-1	10
S49593000	B1-19	4
S49594301	Sp1-C2-37	71
	Ga1-C2-37	74
	Ga1-C2-37	74
S49595001	C2-37-23	10
	C3-37-19	12
S49596301	Sp1-C2-37	71
	Ga1-C2-37	74
	Ga1-C2-37	74
S49597301	Ga1-C2-37	74

CODE	REF.NO	page
S49602201	Z2-67-1	68
S49603000	Z1-11	64
S49604000	Z1-20	64
S49605001	E-8	22
S49609001	E-13	22
S49615009	V-20	62
S49616009	V-20-5	62
S49618000	F-53	26
S49619001	V-20-5-1	62
S49620000	F-17	26
S49622000	F-19	26
S49623000	F-34	26
S49624000	F-35	26
S49625000	F-36	26
S49626000	E-14-1-10	22
S49627001	G-3	28
S49629201	J-1	32
S49630001	D1-1	18
	D2-1	20
S49631001	D1-2	18
	D2-2	20
S49632001	D1-3	18
	D2-3	20
S49635001	D1-4	18
	D2-4	20
S49636001	D1-5	18
	D2-5	20
S49637001	D1-6	18
	D2-6	20
S49638001	D1-7	18
	D2-7	20
S49639001	D1-15	18
	D2-15	20
S49640101	D1-17	18
	D2-17	20
S49641001	D1-19	18
	D2-19	20
S49642001	D1-21	18
	D2-21	20
S49643001	D1-23	18
	D2-23	20
S49644001	J-16	32
S49645001	J-10	32
S49646101	J-22	32
S49648001	J-26	32
S49649001	J-26-1	32
S49650001	J-29	32
S49651001	J-35	32
S49652101	K-1	36
S49653001	M-5	38
S49654001	M-5-1	38
S49655001	M-5-4	38
S49656001	M-6	38
S49657001	M-7	38
S49659001	L-1	36
S49660101	L-3	36
S49661101	L-7	36
S49662001	L-17	36
S49663001	L-13	36
S49664000	L-20	36
S49665001	M-1	38
S49666001	M-1-1	38
S49667101	U1-1-1	56

CODE	REF.NO	page
S49668101	U1-1-1-1	56
S49669100	U1-1-1-1-1	56
	U2-1-2-1-1	58
S49672001	U1-1-1-1-2	56
S49673000	U1-1-1-1-10	56
	U2-1-2-1-9	58
S49674001	U1-1-1-1-11	56
	U2-1-2-1-10	58
S49675101	U2-1-2	58
S49676101	U2-1-2-1	58
S49681009	A-22-2	2
S49683001	C1-35	8
S49685000	E-14-1-11	22
S49688001	B1-1	4
S49689001	B1-16-6	4
S49694001	Sp1-C2-37-8	71
	Sp1-C2-37-8	71
	Ga1-C2-37-8	74
S49695001	Sp1-C2-37-9	71
	Sp1-C2-37-9	71
	Ga1-C2-37-9	74
S49696001	Sp1-C2-100	71
	Sp1-C2-100	71
	Ga1-C2-100	74
S49697001	Sp1-C2-100	71
	Sp1-C2-100	71
	Ga1-C2-100	74
S49698001	Sp1-C2-100	71
	Sp1-C2-100	71
	Ga1-C2-100	74
S49699001	Ga1-C2-100	74
S49700001	Ga1-C2-100	74
S49980001	Ga1-FM	78
S49934009	R-30	50
S49938000	Q1-1-26-21	42
S49939101	Q1-1-26	42
S49941001	Ga1-C2-100	75
S49942001	Ga1-C2-100	74
S49943001	Ga1-C2-100	74
	Ga1-C2-100	74
S49944001	Ga1-C2-100	75
S49945001	Ga1-C2-100	75
S49946001	Ga1-C2-100	75
S49947000	V-20-14	62
S49948001	Ga1-C2-100	75
S49949001	Ga1-C2-100	74
S49955001	C2-43	10
	C3-43	12
	C4-43	14
S49957000	F-18	26
	F-46	26
S49958000	F-47	26
S49959001	F-14	26
S49960109	A-17	2
S49961109	A-17-1	2
S49962000	A-17-2	2
S49970001	Ga1-C2-100	75
S49971001	Ga1-C2-100	76
S49972001	Ga1-C2-100	76
S49973001	Ga1-C2-100	76
S49974001	Ga1-C2-100	76
S49975001	Ga1-C2-100	76
S49976100	Ga1-C2-100	75

CODE	REF.NO	page
S49977100	Ga1-C2-100	75
S49978100	Ga1-C2-100	75
S49979400	R-14-1	50
S49980001	Sp1-J-53	70
	Sp2-J-53	72
	Sp2-J-53	72
	Sp2-J-53	72
	Ga3-J-53	78
S49981000	E-14-1-9	22
S49982000	F-12	26
S49983000	F-20	26
S49984000	F-21	26
S49985000	F-48	26
S49986000	F-49	26
S49987000	F-50	26
S49988001	J-45	32
S49992000	F-1	26
S49994001	J-38	32
S49995001	F-51	26
S49999201	A-100	2
S50000201	Z2-67-2	69
S50529000	E-14-2-2	24
S50645000	P-1-10	40
S51084001	C4-100	14
	Sp2-C4-100	73
	Sp2-C4-100	73
S51095301	Sp1-C2-37	71
	Ga1-C2-37	74
S51097000	Z1-75-1	66
	Z1-75-1	66
S51098000	A-40	2
S51282001	Z2-35-1-3	68
	Z2-35-2-3	68
S51283001	Z2-35-1-1	68
S51283001	Z2-35-2-1	68
S51449001	Ga3-J-53	78
S51451000	U1-1-1-1-9	56
	U2-1-2-1-8	58
S51460009	A-33	2
S51848101	Sp2-C3-37	73
	Ga2-C3-37	77
S51849101	C3-37-1	12
S51851101	Sp2-C3-37	73
	Ga2-C3-37	77
S51852001	Sp2-C3-100	73
	Sp2-C3-100	73
	Ga2-C3-100	77
S51853001	Sp2-C3-100	73
	Sp2-C3-100	73
	Ga2-C3-100	77
S51859101	G-5	28
S52091000	S-1-1-2	54
S52097001	Z2-67-2-1-2	69
S52098201	C4-232	16
S52834201	B2-30	6
S52836000	B2-47	6
S52838000	B2-35	6
S52839200	B2-36	6
S52840001	B2-40	6
S53031001	Q1-H-1	44
S53032000	Q1-11	42
S53033001	Q1-H-2	44
S53034001	Q1-H-3	44

CODE	REF.NO	page
S53035001	Q1-H-4	44
S53036001	Q1-H-5	44
S53037001	Q1-H-6	44
S53038001	Q1-H-7	44
S53039001	Q1-H-8	44
S53040001	Q1-H-9	44
S53055100	T-2	54
S53119001	A-13-1	2
S53120001	A-13-2	2
S54644000	U1-1-1-1-7-1-1	56
	U2-1-2-1-5-1-1	58
S54645000	U1-1-1-1-7-1-2	56
	U2-1-2-1-5-1-2	58
S54646000	U1-1-1-1-7-1	56
S54647000	U2-1-2-1-5-1	58
S54648000	U1-1-1-1-7	56
S54649000	U2-1-2-1-5	58
S55140001	E-24	22
S55157000	D1-12	18
	D2-12	20
S55208000	A-25	2
S55213001	E-9	22
S55214000	E-23	22
S55215001	E-19	22
S55216001	E-14-2-1-1	22
	E-14-1-1	22
S55311001	Z1-75	66
S55311002	Z1-75	66
S55479001	D1-18	18
	D2-18	20
S55572001	B2-31	6
	B2-48	6
S55627001	Q1-54	44
S55629101	R-40	52
S55630001	R-40-1	52
S55632001	R-40-3	52
S55633001	Z1-70	64
S55658000	E-22	22
S55659000	F-54	26
S55663001	Z1-23	64
S55877001	B1-15	4
S55889001	S-1	54
S55890001	S-1-1	54
S55891000	S-1-1-1	54
S55927101	E-14-1	22
S56017000	B2-30-1	6
S56018000	B2-30-2	6
S56019001	B2-30-3	6
S56167000	R-6-1	50
	R-6-1	50
S56167001	R-6-2	50
	R-6-2	50
S56167003	R-6-3	50
	R-6-3	50
S57925001	A-23	2
S57965000	E-14-2-1-10	24
S58890001	D1-11	18
S59366000	R-14-1-1	50
S59367000	R-14-1-2	50
S59620001	Ga3-J-53	78
S59763000	D1-25	18
S59871001	J-22-3	32
S59872001	J-22-2	32

CODE	REF.NO	page
S59873001	J-22-4	32
S59874001	J-22-1	32
S59885001	E-14-2-1	22
S59886001	E-14-2-1-9	22
	E-14-2-1-11	24
S59888001	E-14-2	22
S59893001	J-12	32
S59903001	Ga1-C2-37	74
S59909001	Ga1-C2-37-8	74
S59912001	C1-1-2	8
S59913001	C1-4	8
S59914001	C1-4-1	8
S59915001	C2-5	10
	C3-5	12
	C4-5	14
S59916001	C2-31	10
	C3-31	12
	C4-31	14
S59917001	C2-46	10
	C3-46	12
S59918001	C2-38	10
	C3-38	12
	C4-38	14
S59919000	C2-50	10
	C3-50	12
	C4-50	14
S59920001	A-41	2
S59921001	C2-39	10
	C3-39	12
	C4-39	14
S59221001	Sp1-E24	70
	Sp1-E24	70
	Sp1-E24	70
	Sp2-E24	72
	Sp2-E24	72
S59923000	C2-52	10
	C3-52	12
	C4-52	14
S59927001	C2-37-25	10
	C3-37-21	12
S59931001	Z2-35-1-11-3	68
	Z2-35-2-15-3	69
	Z2-35-2-16-3	69
S60400000	Z1-902	66
S60711001	Z1-903	66
SA0037000	Q1-1-26-5	42
SA0049001	J-22-5	32
SA0703001	M-17	38
SA1034000	Q1-1-26-9	42
SA1579019	Sp1-Z1-17	71
SA1752009	Sp1-Z1-17	71
SA1752014	Sp1-Z1-17	71
	Sp1-Z1-17	71
	Sp2-Z1-17	73
	Sp2-Z1-17	73
	Sp2-Z1-17	73
SA1881001	Sp1-E-22	70
	Sp1-E-22	70
	Sp1-E-22	70
	Sp2-E-22	72
	Sp2-E-22	72
	Sp2-E-22	72
SA1890001	Sp1-E-22	70

CODE	REF.NO	page
SA2173001	Sp1-E-22	70
	Sp1-E-22	70
	Sp1-E-22	70
	Sp2-E-22	72
	Sp2-E-22	72
	Sp2-E-22	72
U32744000	P-1-12	40
U34870001	S-1-1-7-5	54
UA4817000	Q1-10-1	42
UA4817000	Z1-901	66
UD2390001	U3-2-1-8	60
UL0025000	S-1-1-7-7	54
XA2220050	S-1-1-10	54
Y51030150	P-1-15	40

brother

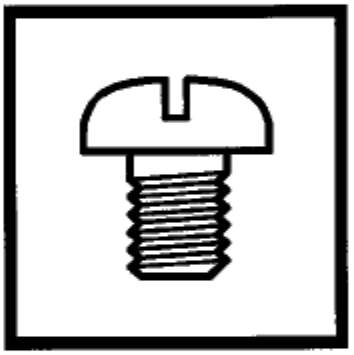

パーツブック
PARTS BOOK

ブラザー工業株式会社
〒467-8561 名古屋市瑞穂区苗代町 15 番 1 号　TEL (052) 824-2392

BROTHER INDUSTRIES, LTD
15-1, Naeshiro-cho, Mizuho-ku, Nagoya 467-8561, Japan. Phone : 81-52-824-2177

Printed in Japan

118-V30, 118-V31, 118-V32
S96V30-401
2002.10. H (1)